Microsoft® Flight Simulator®

Microsoft®

KLITTE
Box 12 Ramco, Sa
Australia 5322

Microsoft® Flight Simulator

Information Manual
and Flight Handbook

For IBM® Personal System/2™,
IBM Personal Computers, and Compatibles

Microsoft Corporation

Information in this document is subject to change without notice and does not represent a commitment on the part of Microsoft Corporation. The software described in this document is furnished under a license agreement or nondisclosure agreement. The software may be used or copied only in accordance with the terms of the agreement. The purchaser may make one copy of the software for backup purposes. No part of this manual may be reproduced or transmitted in any form or by any means, electronic or mechanical, including photocopying and recording, for any purpose other than the purchaser's personal use without the written permission of Microsoft Corporation.

© Copyright Bruce A. Artwick, 1988.

© Copyright Microsoft Corporation, 1988. All rights reserved.

© Some scenery provided and copyrighted by Aerad.

Simultaneously published in the U.S. and Canada.

Microsoft®, MS-DOS®, and the Microsoft logo are registered trademarks of Microsoft Corporation.

Flight Simulator® is a registered trademark of Sublogic Corporation used under license by Microsoft Corporation.

IBM® and PC AT® are registered trademarks, and Personal System/2™ and PC XT™ are trademarks, of International Business Machines Corporation.

Hercules™ is a trademark of Hercules Computer Technology.

Document No. 990030001-300-R02-0887

Contents

Welcome ix
About This Manual x
Flight Simulator Conventions xi
About the Designer xii
System Requirements xii
Getting Started xiii
Using a Floppy Disk System xiii
Using a Hard Disk System xiv
Answering the Startup Questions xiv
No-Questions-Asked Startup xvi
Exiting Flight Simulator xvii
Flying Start xviii

Flight Simulator Basics 1

1 Basic Window Display and Flight Instruments 5
Basic Window Display 5
Instrument Panel and Radio Stack 7
Screen Color Schemes and Patterns 8
Menu Bar and Menu System 8
Three-Dimensional Window 11
Instrument Panel and Radio Stack 11
Standardized Instrument Cluster 11
Other Flight Instruments and Indicators 13
Radios 14
Control Position Indicators 14
Indicator Boxes on the Control Panel 15
Heads Up Display Indicators 15

2 Aircraft Controls 17
Primary Flight Controls 18
Control Yoke and Rudder 18
Throttle 25
Brakes 25
View Controls 25
Selecting the Active Window 27
Selecting the View Mode 27
Zoom Control 28
Selecting View Direction 28
Moving and Sizing Windows 29
Turning Windows On and Off 30
Window Options 31
Spot Plane Control 32
Secondary Aircraft Controls 33
Flaps 33
Elevator Trim 34
Carburetor Heat 35

Magneto Switch and Mixture Full Lean Control 35
Lights 35
Strobe 35
Landing Gear 36
Radio Operation 36
VOR Navigation Radios (NAV 1 and NAV 2) 36
Omni-Bearing Indicator (OBI) 37
DME Source and Ground Speed 38
ADF Navigation Radio 38
ADF/VOR Selector 38
Communications Radio (COM Radio) 38
Transponder 39
Flight Instrument Calibration 39
Altimeter 39
Heading Indicator (Directional Gyro) 39

Flying Flight Simulator 41

3 Flying the Single-Engine Aircraft 45
Flying Under Visual Flight Rule (VFR) Conditions 45
Getting Familiar with the Aircraft 46
Checking Your Instruments 46
Moving the Control Yoke and Rudder 46
Taxiing Around the Airport 47
If You Crash 47
Pre-Takeoff Check 47
Takeoff 48
Accelerating down the Runway 48
Climbing 48
Adjusting the Throttle 49
Straight and Level Flight 49
Turns — Using the Ailerons and Rudder 49
Glides and Descents 50
Landing 50
Refueling and Servicing 51

4 Flying the Business Jet 53
Learjet Flight Characteristics 53
Instruments for the Learjet 53
Controls for the Learjet 53
Flight Techniques 54

Flight Simulator Configuration and Navigation 55

5 Mode Menu — Modes, Libraries, and Flight Recording . . . 59
Aircraft and Flight Mode Libraries 60
Aircraft Library 60
Mode Library 61
Flight Recording 63
Instant Replay 63
Demo Recorder 64

6 Enviro Menu — Setting Environmental Factors 67
Season 67
Stars 67
Time of Day 67
Clouds 68
Thunderstorms 69
Surface Winds and Winds Aloft 69
Turbulence 69

7 Sim Menu — Setting Simulation Control Factors 71
Sound 71
Pause 71
Auto Coordination 72
Smoke System 72
Control Position Indicator 72
Ground Texture 72
Crash Detection and Analysis 72
Reliability 73
Realism 73
Partial Panel 74
Keyboard Sensitivity 74

8 NAV/COM Menu — Traveling Through Flight Simulator's World 75
Map Display Options and Controls 75
Moving Around in the World 76
Slewing 76
Setting Coordinates 78
Radio Navigational Aids Summary 78
Airport Beacons 79
Autopilot 79

Flight School 81

9 Logbook 85
Logbook Format 85
Making Logbook Entries 85
Editing or Printing Your Logbook 86

10 Ground School 87
Flight Physics 87
Balance of Forces 87
Attitude Flying 90
Information Scan 91
VFR and IFR Weather Restrictions 91
Cruising Altitudes 92

11 Basic Flight Training 95
Using the Flight Instruction Menu 95
Instructor Control Mode 95
Student Control Mode 96

Ground Operations 96
Lesson 1. Taxiing 96
Basic Flight Maneuvers 97
Lesson 2. Attitude Flying 97
Lesson 3. Straight and Level 97
Lesson 4. Turns 98
Lesson 5. Climbs 98
Lesson 6. Cruise Descents 99
Lesson 7. Slow Descents 99
Takeoffs and Departure Climbs 100
Lesson 8. Takeoff Roll 100
Lesson 9. Crosswind Takeoff 100
Landing Approaches and Landings 101
Lesson 10. Final Approach, Flare, and Touchdown 101

12 Advanced Flight Training. 103
Stalls 103
Lesson 1. Full Stalls — Power Off (Approach) 103
Lesson 2. Full Stalls — Power On (Departure) 104
Lesson 3. Accelerated Maneuver Stalls 104
Other Advanced Instruction 105
Lesson 4. Uncoordinated Flight 105
Lesson 5. Slips 105
Lesson 6. Steep Turns 105
Lesson 7. Traffic Pattern 106
Lesson 8. VOR Tracking with Wind 107

13 Aerobatics Course 109
Simple Aerobatics 109
Lesson 1. The Spin 111
Lesson 2. The Loop 113
Lesson 3. Aileron Rolls 114
Complex Aerobatics 115
Lesson 4. Inverted Flight 115
Lesson 5. Split S 116
Lesson 6. Immelman 117
Lesson 7. Hammerhead 119

14 Navigation Course 121
Pilotage 121
Dead Reckoning 121
VOR Navigation 122
Distance Measuring Equipment (DME) 126
Automatic Direction Finder (ADF) 126
Instrument Landing System (ILS) 128

15 Flight Analysis and Course Plotting 129
Flight Analysis 129
Landing Analysis 129
Maneuver Analysis 129
Course Plotting 130

16 EFIS/CFPD Display 131

Entertainment 133

17 Formation Flying and Crop Dusting 137
Formation Flying 137
Crop Duster 137

18 Multi-Player Flight 139
Connecting Two Machines Together 139
Direct Cable Connections 139
Modem Connection 139
Multi-Player Flight 141
Sending and Receiving Messages 142
Other Multi-Player Options 142
Suggestions for Multi-Player Flight 143

19 World War I Ace. 145
Beginning the Game 145
Declaring War 146
Becoming an Ace 146
War Report 146
The Enemy 147
Radar and Instruments 147
Strategy and Tactics 147
World War I Ace Control Summary 148

Reference to Flight Simulator 149

Airport Directory 153
New York and Boston Area 153
Chicago Area 154
Seattle Area 155
Los Angeles Area 156
San Francisco Area 157

Airport Runway Maps 159

A Performance Specs 175
Cessna Turbo Skylane RG II Performance Specs 175
Gates Learjet 25G Performance Specs 176

B Using a Mouse or Joysticks 177
Using a Mouse 177
Mouse Setup 177
Pointer and Yoke Modes 177
Toggling Between Pointer and Yoke Modes 179
Adjusting Mouse Sensitivity 179
Using Joysticks 179
Joystick Setup 180
Joystick Calibration 181
Adjusting Joystick Sensitivity 182

C Keyboard Summary 183
Controlling Windows and Views 183
Airplane Controls 183
Flight Controls 184
Calibration 184
Setting Radios 185
Slewing 185
WWI Ace 186
Menu System 186
Glossary 187
Index 197

Welcome

Welcome to Microsoft® Flight Simulator. Flight Simulator is a third-generation, real-time, flight simulation program that pilots of all ages and levels of experience will enjoy. The simulation considers 47 important aircraft characteristics and includes an out-the-window, three-dimensional, dynamic flight display, extensive flight controls, and minimum Visual Flight Rules (VFR) and Instrument Flight Rules (IFR) instrumentation as specified by the Federal Aviation Administration (FAA).

Flight Simulator features detailed graphics that closely simulate a pilot's actual perspective. Third-generation, high-precision graphics drivers present solid-modeled images with hidden surface elimination and surface shading, and much greater accuracy than any previous microcomputer Flight Simulator. Graphics detail and quality are adjusted to make the best use of whatever display adapter and monitor you use (CGA, EGA, Personal System/2, or others).

Flight Simulator's "world" is more than 10,000 by 10,000 miles square, with a resolution of about one one-hundredth inch. The world encompasses the entire continental United States and extends into Canada, Mexico, and the Caribbean. The "populated" world consists of five areas and includes 118 airports, detailed in charts at the back of this manual. Winds, clouds, time of day (for dawn, day, dusk, and night flight), and navigation aids are also included.

As a convenience to new pilots, flying lessons and varying degrees of difficulty are provided. If you have never flown before, you can use the basic lessons and easiest flight mode to learn the fundamentals of flight control. When you have mastered the basics of flight, or if you are already a seasoned pilot, you can select more realistic and difficult modes to simulate sophisticated flight factors.

In all modes, except Entertainment modes, you can control environmental conditions such as wind, time of day, and turbulence. You can also set a reliability factor that determines the frequency with which flight problems arise. You can begin or resume flight from a series of interesting prerecorded flight situations, and you can even set up test situations and record your flights for playback at a later time.

Flight Simulator simulates two types of aircraft: a single-engine, high-performance, propeller-driven aircraft of the Cessna 182 class, and a business jet of the Gates Learjet 25G class. The Cessna 182-type single-engine prop aircraft is an ideal plane for pilot training because it has climb performance and speed that keep a pilot busy, especially on landing approach. This aircraft's simulation is designed for realism and presents the feeling of flying in a real-life situation.

The business jet simulation is designed more for fun than for realism. The aircraft is easy to fly and aerobatic, and lets you see what it is like to fly at 450 knots at an altitude of 45,000 feet.

Flight Simulator can provide hours of rewarding entertainment. In addition to Prop and Jet modes, Flight Simulator includes five games, which let you test your flying skills.

About This Manual

This manual presents all the instructions necessary to fly Flight Simulator. It also contains sections on basic flying techniques, flying lessons, and charts for navigation.

We recommend that you begin by getting the simulator running using the "Getting Started" instructions in this introduction, then learn the instruments and controls in the "Flight Simulator Basics" section.

Go through the "Flying Flight Simulator" section to get airborne. This acts as an orientation course for new pilots, and a check flight for those with previous flight experience. Experienced pilots may skip over the flight instruction sections ("Pre-Takeoff Check" and "Landing" in Chapter 3, "Flying the Single-Engine Aircraft"). Before flying the Learjet, all pilots should read Chapter 4, "Flying the Business Jet," to understand the control and realism differences.

If you are a new pilot, proceed to the "Flight School" section, where you'll attend a brief ground school, followed by basic, advanced, and aerobatic flying lessons, plus get information about navigation, flight analysis, and course plotting. Experienced pilots will also find flight analysis and course plotting quite useful.

The rest of the manual is meant for exploring. "Flight Simulator Configuration and Navigation" tells how to use the menu system to activate everything from surface winds to turning the sound on and off. Finally, if you prefer to have some video-game–like fun, read the "Entertainment" section.

Throughout your flights, use the reference sections at the end of the manual. Look over these sections before going any further, just to get to know what's there.

Terms that appear in italics in the text are defined in the Glossary.

If you would like further information on flying, we recommend that you read any of the following publications. They are available at *Fixed Base Operators* (*FBO*s) or flight training schools at most airports.

To learn about flying:

- *Flight Training Handbook*, U.S. Department of Transportation, Federal Aviation Administration
- *Aviation Fundamentals*, Jeppesen Sanderson, Inc.
- *Instrument Flying Handbook*, U.S. Department of Transportation, Federal Aviation Administration
- *Flight Physics and Aircraft Control with an Introduction to Aerobatics*, Moment and Emanual

Other publications:

- *Airman's Information Manual*, Aero Publishers, Inc.
- *Chicago Sectional Aeronautical Chart*
- *Los Angeles Sectional Aeronautical Chart*
- *New York Sectional Aeronautical Chart*
- *San Francisco Sectional Aeronautical Chart*
- *Seattle Sectional Aeronautical Chart*

Any of these publications can also be ordered directly from Sporty's Pilot Shop, Clermont County Airport, Batavia, Ohio 45103, 1-800-543-8633.

Flight Simulator Conventions

Here are a few conventions that will help you greatly when learning and flying Flight Simulator. Knowing these conventions will help you learn quickly when using the simulator, and will help refresh your memory of controls and menus after long periods away from Flight Simulator.

- Menu options have symbols in them that mean things:

Symbol	Meaning
:	Selecting this option causes the item following it to alternate among, or cycle through, a few items.
;	Selecting this option requires you to type something, and then press ENTER.
+	This option is on. Selecting the option toggles it on and off.
. . .	Selecting this item causes another menu to appear.
#	The key(s) following # can be used to activate the option from the keyboard. (Do not press # first.)

- Instruments and controls on the instrument panel have letters on them. These letters tell you which key to press to use the instrument or control.
- Selecting an option often takes you to a new menu. The ESCAPE key moves you back to the previous menu. When in any menu, press the SPACEBAR to start flying again and to display the main menu bar.
- "Click the mouse" means to point at something on the screen with the mouse-controlled cursor and press the left mouse button.
- Pressing the right mouse button toggles between yoke and pointer modes.
- Clicking the left side of digits or knobs on the instrument panel decreases the setting; clicking the right side advances it.
- The + and – keys are used to increase and decrease the values of many functions. Always precede the + and – with the key for the desired function.

About the Designer

Flight Simulator was written by Bruce A. Artwick, President of Sublogic Corporation, Champaign, Illinois. Sublogic Corporation is a hardware and software firm specializing in high-performance graphics systems. Mr. Artwick gained extensive experience in high-performance signal processor architecture design and microcomputer-based radar control systems at Hughes Aircraft Company. In addition, he has researched minicomputer- and microcomputer-based graphics system design at the Aviation Research Laboratory and Digital Computer Laboratories, University of Illinois, where he received a B.S. and M.S. in electrical engineering, and is an aviation enthusiast and private pilot since 1975.

System Requirements

The following equipment is required:

- IBM Personal Computer, XT, AT, Personal System/2, or compatible
- At least 256K bytes of memory (IBM PC with CGA. EGA, Personal System/2, and Hercules graphics adapters may require more memory. If so, the program will specify the requirement when you start.)

- At least one floppy disk drive (double-sided, low- or high-density)
- Color Graphics Adapter (CGA), Enhanced Graphics Adapter (EGA), Personal System/2 Graphics System, or Hercules Monochrome or In ColorCard
- Appropriate composite, monochrome, or RGB monitor for your graphics adapter
- IBM-DOS or MS-DOS® (version 2.00 or later)

Optional equipment includes:

- Hard disk drive
- Microsoft Mouse
- One or two joysticks and a Game Control Adapter Card

Getting Started

The Flight Simulator program is contained on the disks you received in this package. There are no hidden files or copy protection.

Using a Floppy Disk System

It's a good idea to make a backup copy of the floppy disks for emergency use. Do this by copying all the files onto a newly-formatted floppy disk, or use the DISKCOPY program that comes with DOS. Your MS-DOS manual describes how to make copies of standard MS-DOS disks.

Starting Flight Simulator from Floppy Disk

1. Start IBM-DOS or MS-DOS.
2. Insert the Flight Simulator Program disk into floppy drive A:.
3. Type *a:* and then press ENTER to log onto drive A:.
4. Type *fs* and then press ENTER to run Flight Simulator.

Note The 5.25 disk version is contained on two disks. Flight Simulator will ask for the Scenery disk when required.

Using a Hard Disk System

Flight Simulator is more convenient and offers fast loadup and scenery loading when run from hard disk. When you first receive this program, install it on your hard disk.

Installing Flight Simulator on your Hard Disk

1. Start IBM-DOS or MS-DOS.
2. Insert the Flight Simulator disk into floppy drive A:.
3. Log onto the hard drive on which you want the simulator to reside.
   For example, to log onto hard drive C:, type *c:* and then press ENTER.
4. Type *cd* and then press ENTER to go to the root directory.
5. Type *md fltsim* and then press ENTER to make a directory for Flight Simulator.
6. Type *cd fltsim* and then press ENTER to change directories.
7. Type *copy a:*.** and then press ENTER to copy all Flight Simulator files from the floppy disk in drive A: to the hard disk.
8. If you are using 5.25-inch disks, repeat step 7 for the second disk.

Flight Simulator is now ready to run from hard disk.

Starting Flight Simulator from Hard Disk

1. Start IBM-DOS or MS-DOS.
2. Log onto the hard disk directory set up for Flight Simulator.
   For example, to log onto the directory called "fltsim" on hard disk C:, type *cd fltsim* and then press ENTER.
3. Type *fs* and then press ENTER to run Flight Simulator.

Answering the Startup Questions

When started, Flight Simulator asks a series of questions concerning monitor type, keyboard, and so on. Choose the appropriate responses for your configuration from the menus. The menus are described below. The choices shown are for the basic Flight Simulator configuration.

Flight Simulator has "installable drivers" to accommodate advances in PC display and control devices and new additions to Flight Simulator software. Menu options increase as new display- and control-system drivers are added to Flight Simulator. Any additional menu items are usually self-explanatory and are described in documentation that comes with the drivers.

Startup Sequence Selection

If a user has previously set up Flight Simulator to bypass the startup menus, the following menu appears when you start the program:

Choose startup sequence by number:

1. Go through startup menus
2. No-questions-asked startup

Choose response 1. For information about response 2, see "No-Questions-Asked Startup" later in this chapter.

Introduction Menu and Display Device Selection

This menu lets you choose your display device. You must know what display device (graphics adapter and monitor) you are using. The most common adapter is the Color Graphics Adapter (CGA). If you are in doubt about your adapter, try Color Graphics Adapter first.

Some display devices have more than one mode. The Enhanced Graphics Adapter (EGA), for example, has Color and Monochrome modes. This choice depends on the monitor you are using. Read the menu items and find the one that most closely matches your adapter and monitor.

What display are you using?

a. Color composite monitor (CGA)
b. Black and white monitor (CGA)
c. RGB monitor (CGA)
d. Liquid crystal display (CGA)
e. Hercules monochrome (Blue Chip)
f. EGA monochrome
g. EGA 16 color 320x200 RGB Mon
h. EGA 16 color 640x350 ENHANCED mon
i. IBM PS/2 16 color 320x200
j. IBM PS/2 256 color 320x200
k. Hercules InColor 16 color 720x348
l. Tandy 1000 320x200 16 color
m. Custom Drive
(Type a letter: A, B, C, etc.)

Operating Mode Menu

This question is asked so that novice users can start a demo without first learning Flight Simulator. Choose Regular flight mode to enter Flight Simulator for normal flight.

Select operating mode:

a. Demo mode
b. Regular flight mode
c. Demo without sound

(Type A, B, or C)

Keyboard Type Selection

There are a few variations of PC keyboards. Keys have been arranged to be as independent of these variations as possible, but function keys F1 to F10 pose a problem. You must therefore select the keyboard based on the function key position.

Select keyboard mode:

a. IBM PC, function keys on left
b. IBM PC, function keys on top
c. TANDY 1000 keyboard

(Type A, B, or C)

Logbook Updating

Flight Simulator can keep a logbook of all your flights. You will be asked if you want to log this flight. If you answer yes, Flight Simulator checks to see if it can write to the disk. If the disk is write-protected, Flight Simulator tells you it can't make entries in the logbook. If it can write to the disk, it asks for an eight-character name of the logbook in which you want the flight logged.

Type the name (an abbreviated form of your name is appropriate). If the logbook doesn't exist, Flight Simulator asks if you want to retype the name, create a logbook with that name, or cancel the request to log the flight. Choose the appropriate option.

For more information about logbooks, see Chapter 9, "Logbook."

Controls Selection

Some users prefer to fly with mouse control. If a mouse driver is installed in your computer, Flight Simulator asks if you want to use a mouse. Answer according to your preference.

No-Questions-Asked Startup

If you always answer the startup questions in the same way, you can use the no-questions-asked startup feature to answer the questions for you automatically.

Note Flight Simulator writes a file to operate this feature. The program disk must not be write-protected or the program should be on hard disk. Never remove write protection from the master disk. Make a backup copy and run it without the write-protect tab.

Using No-Questions-Asked Startup

1. Start Flight Simulator in the normal way by typing *fs* and then pressing ENTER.
2. Go through all the menus as usual. Your responses are automatically saved in a file on disk.
3. From now on, if you don't want to answer the startup questions, start the simulator by typing *fs3* and then pressing ENTER. Your previous responses are used to answer the questions.

If you start by typing *fs*, you are asked if you want to go through the menus or perform the no-questions-asked startup.

If you ever want to change your answers to the menu questions, choose to go through the menus. The new startup sequence will be recorded.

Note The menu responses are saved in a file named AUTOEXEC.FS3. When you type *fs* to start, and Flight Simulator finds AUTOEXEC.FS3, the Choose Startup Sequence menu appears. If you don't want this menu to appear, either erase the AUTOEXEC.FS3 file or rename it.

Exiting Flight Simulator

You can shut down Flight Simulator and return to DOS by:

- Pressing CONTROL+C.

or

- Choosing Mode menu option 7, Quit.

or

- Pressing CONTROL+BREAK. This returns you to DOS.

Flying Start

If you're eager for your first flight — even before you read this manual — start flying now by following this procedure. You'll get an idea of what the Flight Simulator is all about.

Making Your First Flight

1. Start Flight Simulator.
2. If you see the menu telling you to choose the startup sequence, choose "Go through startup menus".
3. When the startup menus appear, choose the display device and monitor type that most closely match your system.
4. Choose Regular flight mode on the second menu by pressing B.
5. Select the keyboard type by seeing if the function keys are on the left or top of the keyboard. Press A if on the left; B if on top; C if a Tandy 1000 keyboard.
6. Press N when asked if you want to log the flight.
7. If the question "Do you want to use the mouse?" appears, press N to answer No. After you answer the questions, you'll be on Meigs Field in Chicago (a small airport on a peninsula projecting into Lake Michigan).
8. Press SCROLL LOCK, then the LEFT arrow key (4 on the numeric keypad) to look out the left side of the airplane. Notice the wing at the top of the three-dimensional display.
9. Press SCROLL LOCK, then the DOWN arrow key on the keypad, to look out the back of the plane. Notice the tail at the screen's center.
10. Press SCROLL LOCK, then the UP arrow key on the keypad, to return to a forward view.
11. Press the DOWN arrow key four times in rapid succession (no more than one-half second between keypresses). This raises the elevator a bit.
12. If the function keys are on the left of the keyboard, press F2; if the function keys are across the top, press F4. This increases throttle to full so the plane starts rolling down the runway. The plane will take off by itself. You'll be able to tell when you leave the ground.
13. Once off the ground, press SCROLL LOCK, then the DOWN arrow key, to look out the back again.

14. Press SCROLL LOCK, then the UP arrow key, for the front view. Watch the flight instruments. Airspeed, altimeter, and vertical velocity gauges will all show movement.
15. Press the LEFT arrow key to start banking the plane. The horizon will tilt. Don't let the bank get too steep.
16. After about 20 degrees of bank, press 5 in the center of the numeric keypad (not on the top row of keys) to neutralize the ailerons and keep the plane in its current bank.
17. Now press the RIGHT arrow key six times (the plane will begin a nose dive), and wait about a minute without interfering with the controls.
18. After a crash, Flight Simulator resets and returns you to your starting location.

Flight Simulator Basics

1 Basic Window Display and Flight Instruments . . . 5
2 Aircraft Controls . . . 17

Flight Simulator Basics

This section covers the basics that you should learn before flying the Flight Simulator. Read the following chapters to learn about aircraft controls, instruments, and flight systems.

Chapter 1, "Basic Window Display and Flight Instruments," describes what you see on the display screen. The three-dimensional window view, flight instruments, and radios are explained.

Chapter 2, "Aircraft Controls," tells how to control the aircraft, set the radios, and calibrate flight instruments using the keyboard and, optionally, a mouse and joystick.

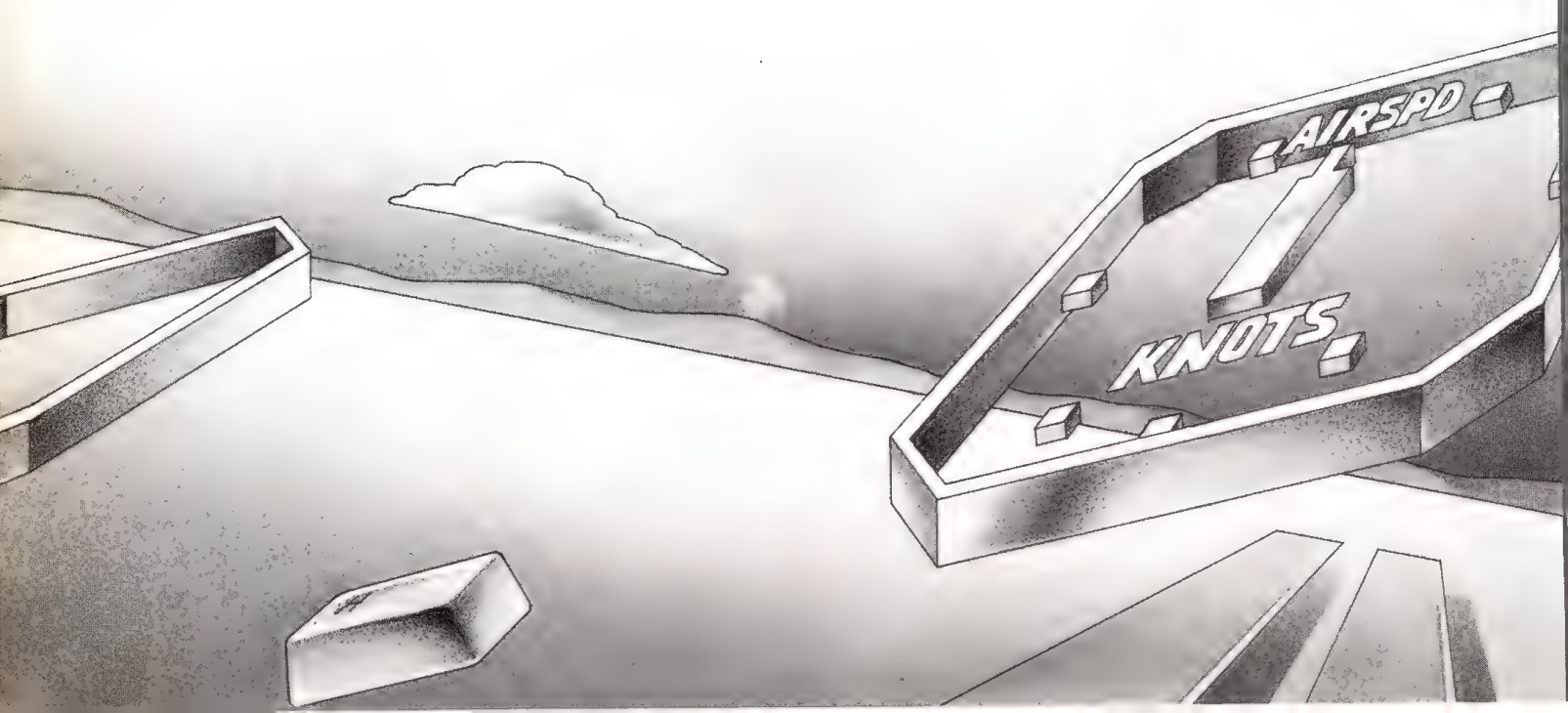

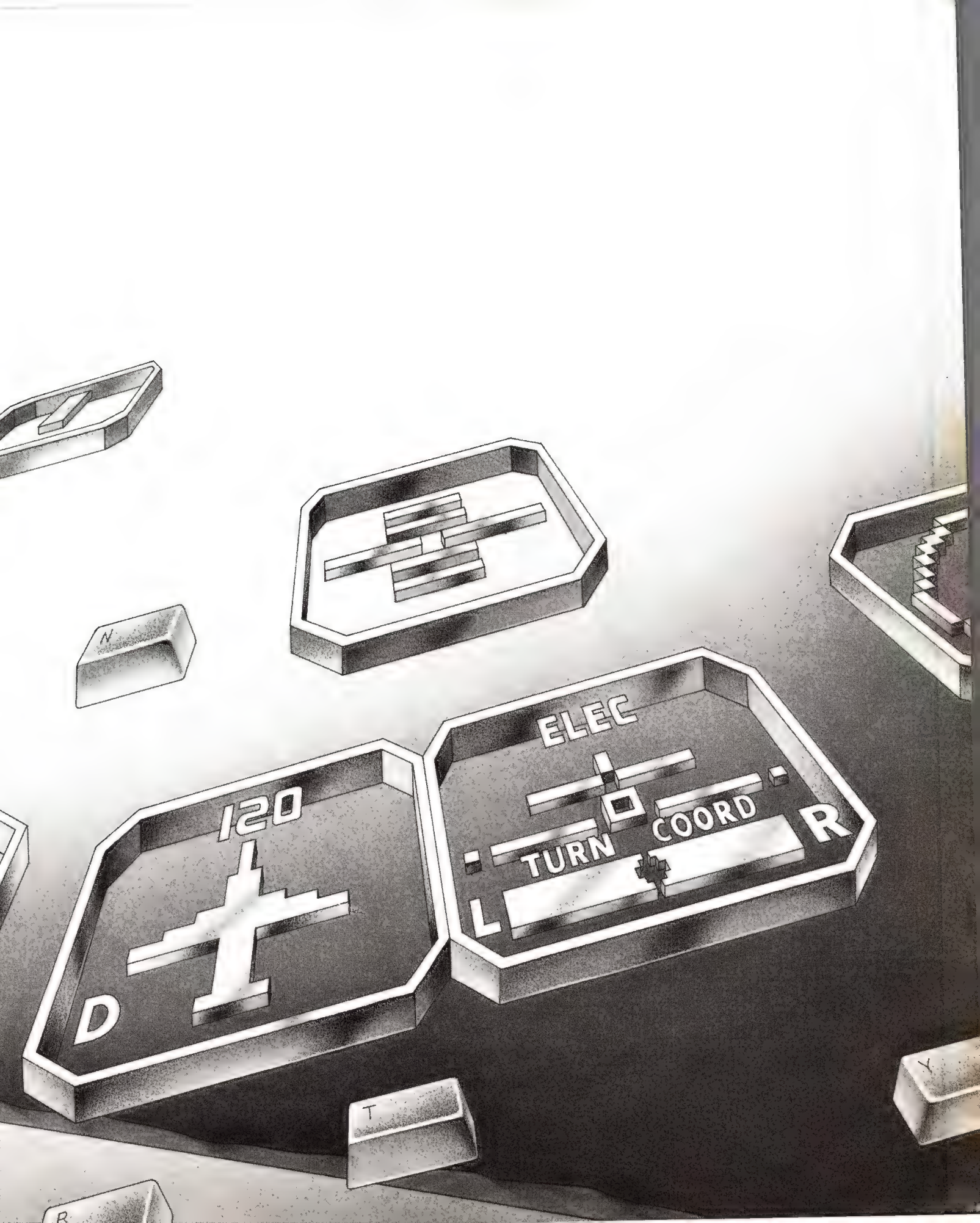
N
120
D
ELEC
TURN
COORD
L
R
T
Y

1 Basic Window Display and Flight Instruments

Flight Simulator has all the instruments and equipment required under *FAA* regulations (part 91.33) for day and night *Visual Flight Rules (VFR)* and day and night *Instrument Flight Rules (IFR)* under nonicing conditions.

Flight Simulator follows a "window" philosophy that places three-dimensional views, the control panel, and command menus in their own areas on the display screen. This section describes the instruments, radios, and 3-D and other windows so that you will recognize them when they appear.

Basic Window Display

Figure 1.1 shows Flight Simulator's basic window display. This is the most basic display configuration using a Color Graphics Adapter (CGA) on an IBM PC. Different display systems (EGA, Hercules, Personal System/2) yield similar displays with higher resolution and more colors.

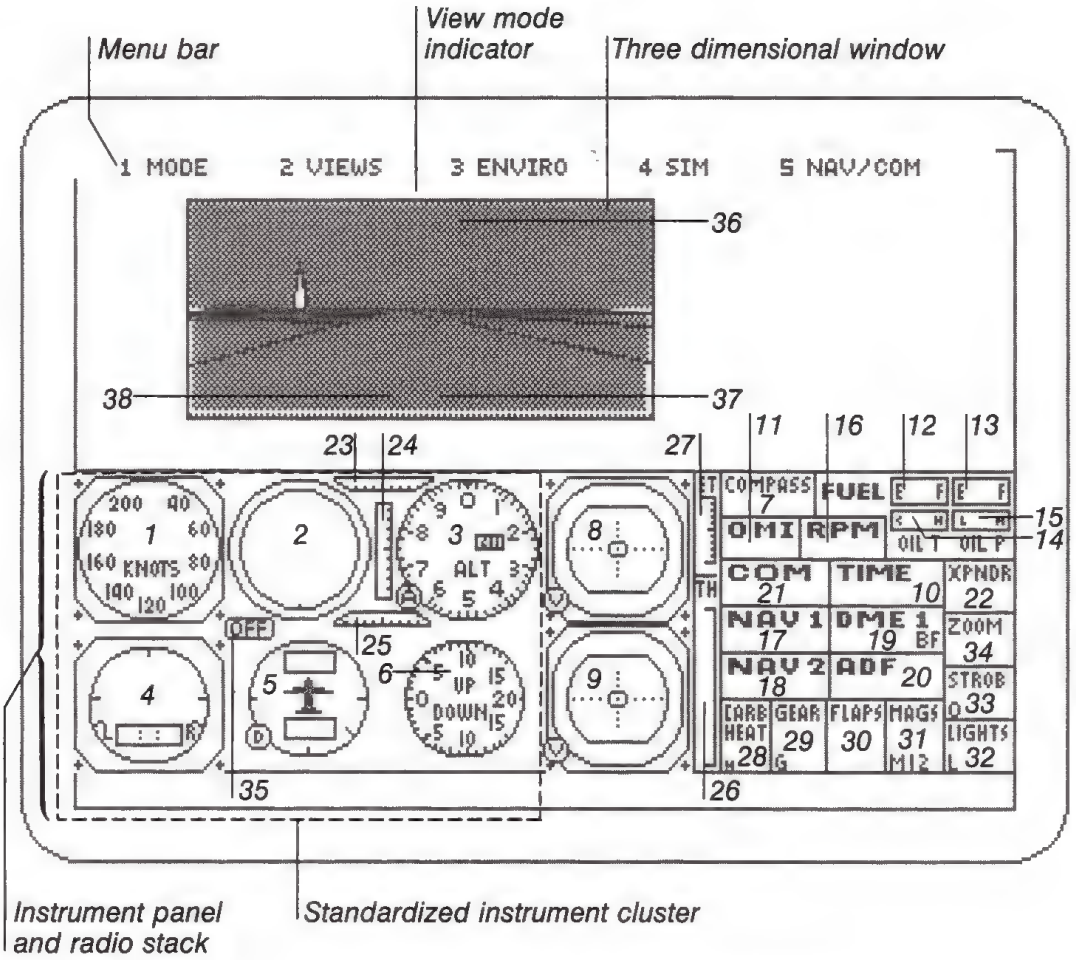

1.1 Instrument Panel and Radio Stack

Instrument Panel and Radio Stack

The Standardized Instrument Cluster

1. Airspeed Indicator (knots)
2. Attitude Indicator or Artificial Horizon
3. Altimeter (feet)
4. Turn Coordinator
5. Heading Indicator or Directional Gyro
6. Vertical Speed or Rate of Climb Indicator

Other Instruments and Indicators

7. Magnetic Compass
8. Omni-Bearing Indicator (OBI) with Glideslope (NAV 1)
9. Omni-Bearing Indicator (NAV 2)
10. Clock
11. O (Outer), M (Middle), and I (Inner) Marker Lights
12. Left Wing Fuel Tank Gauge
13. Right Wing Fuel Tank Gauge
14. Oil Temperature Gauge
15. Oil Pressure Gauge
16. Tachometer

Radios

17. NAV 1 Radio
18. NAV 2 Radio
19. Distance Measuring Equipment (DME)
20. Automatic Direction Finder (ADF)
21. COM Radio
22. Transponder

Control Position Indicators

23. Aileron Position Indicator
24. Elevator Position Indicator
25. Rudder Position Indicator
26. Throttle Position Indicator
27. Elevator Trim Indicator

Indicator Boxes on Control Panel

28. Carburetor Heat Indicator
29. Gear Indicator
30. Flap Position Indicator
31. Magnetos Indicator
32. Lights Indicator
33. Strobes Indicator
34. Zoom Indicator
35. Autopilot Status Indicator

Heads Up Display

36. Axis Indicator
37. Stall and General Warning Indicator
38. Brakes Applied and Status Indicator

Screen Color Schemes and Patterns

Flight Simulator makes the best use of the graphics display device that it can. Three-dimensional views, the instrument panel, and map views are presented in color on display devices that can handle it. Dithering (creating shades of gray and distinctive textures using repetitive patterns) is used on monochrome displays.

Many menus and information displays need more resolution than low-resolution color-display modes allow. On display devices that have high-resolution color modes, all menus appear in full color. On devices without high-resolution color, the display changes to black-and-white high-resolution display mode for some menus. Loss of color is normal on 3-D windows and the instrument panel while these menus are active.

Menu Bar and Menu System

The menu bar at the top of the screen presents the options you use to control the simulation (see Figure 1.1).

Menu option	Used to
1 MODE	Select among demo and flight modes; select aircraft type; save and recall situations; record and playback instant replays and demos.
2 VIEWS	Select among Cockpit, Tower, Track, and Spot modes; set up windows and window characteristics.
3 ENVIRO	Alter environmental factors such as seasons, time, clouds, and winds.
4 SIM	Adjust simulation factors internal to the aircraft and simulation system, including reliability, sound, pause, and auto coordination; set up and calibrate interfaces to external controllers (mouse and joystick); activate auxiliary systems including smoke system and control position indicator window.
5 NAV/COM	Adjust navigational factors, including map display, autopilot, and your location in the world; set up communication functions, including air traffic control communication.

Each option has a number before it, used to select the option.

Selecting Options with the Keys

▣ Press the number or letter on the keyboard (not the keypad).

Selecting Options with the Mouse

1. Put the mouse in Pointer mode. A pointer on the screen indicates that you are in Pointer mode. If you are in Yoke mode, click the right mouse button to change modes.
2. Point at the option.
3. Click the left mouse button.

Note Whenever a menu option with a letter appears, pressing the letter key causes the option to be selected. Any other function the keypress would have performed (A to adjust the altimeter or C to change the COM radio for example) is suppressed.

After an option is selected, a more detailed menu drops down below the selected option. Actions are selected from these menus in the same way (by pressing the number or letter).

Menu Option Standard Conventions

Menu options follow standard conventions shown by these examples:

1 +Map	The plus indicates that this option is selected. Selecting an option with a plus, such as Pause, toggles the plus on and off each time the menu option's number is pressed.
2 Clouds. . .	The three dots after the option indicate that selecting this option causes another menu to appear.
3 Sound #Q	The #Q after the option indicates that you can select the same option by pressing the Q key on the keyboard without activating the menu. Options that have a key associated with them are more easily selected using the keyboard, but the menu option makes a good reference if you haven't flown for a while and don't remember which key to press.
4 Window: First 3D	A colon means that selecting this option causes the item following the colon to step through the options. In this example, the sequence is First 3D, Second 3D, and Map.
5 Speed; 25	A semicolon means that after selecting the option, you must type something, and then press ENTER. In this example, after selecting option 5, you type a wind speed, and then press ENTER.

Activating the Menu System

The menu system is active when the menu bar appears at the top of the screen. If no menu bar is visible, activate it by:

- Pressing the ESCAPE key on the keyboard.

The menu bar will appear.

Deselecting Menus

As you select options that generate new menus, you will end up with many overlapping menus on the screen. You can remove or "close" these menus by deselecting them.

- Press the ESCAPE key. Each press returns you to the previous menu.

or

- With the mouse in Pointer mode, point at the last option on the menu, Press ESC to Exit, and click the left mouse button.

Deselecting All Menus

If you have many overlapping menus and are finished with the menu system, you can close all menus and resume flying by:

- Pressing the SPACEBAR.

Exiting the Menu System

The menu system can be turned off and the menu bar can be removed by:

- Pressing the ESCAPE key on the keyboard.

Three-Dimensional Window

A three-dimensional window usually occupies the top half of the display screen (see Figure 1.1). It can be the view out your windshield, from a spotter plane, or from the control tower, depending on what you select. The title bar above the three-dimensional window shows your View mode. Through this window you can see the runway, terrain, and horizon.

The visual effects of the Flight Simulator program are realistic. Solidly shaded surfaces give the feeling of depth and substance. Cloudy days bring dark skies until you break out of the clouds and reach clear sky. As you fly through the clouds, visibility is obscured. At night, lights on the ground are your only visual reference.

Instrument Panel and Radio Stack

The instrument panel and *radio stack* window occupies the lower half of the screen. This window may be moved downward by dragging the top of the panel with the mouse, or selecting Setup Windows from the Views menu. This makes room for a larger three-dimensional window or map window. For more information, see "Moving and Sizing Windows" in Chapter 2, "Aircraft Controls."

Instruments on the panel and radios in the stack are arranged as they would be in most aircraft. Styles vary from plane to plane, but Flight Simulator uses the most modern form of each instrument.

The six primary flight instruments are grouped together in the *standardized instrument cluster* (see Figure 1.1). In addition to the standardized instrument cluster, the instrument panel includes other instruments, indicators, and radios. You use only a few of these on your first flight. The instruments are described in more detail in Chapter 2, "Aircraft Controls."

The numbers accompanying the instrument and radio names and descriptions below correspond to the numbers on Figure 1.1.

Standardized Instrument Cluster

1. Airspeed Indicator Measures in *knots* the aircraft's speed through the air around it. The *airspeed indicator* is an air-pressure–activated gauge. It does not measure *ground speed*.

2. Attitude Indicator or Artificial Horizon Shows the aircraft's pitch and bank attitudes.

Pitch is the *rotation* of the plane about its *lateral axis* (nose up or nose down) and is measured by the center bar of the attitude indicator. When the bar is aligned with the horizon, you are flying in straight and level flight. Horizontal markings near the center indicate nose-up and nose-down pitch angles.

Bank is the *rolling* of a plane on its *longitudinal axis*. The bank indicator is the small arrow that points to the 10-, 20-, 30-, 60-, or 90-degree marking at the edge of the attitude indicator. When the arrow points to the 0-degree bank mark, you are in straight and level flight. The arrow always points to the top of the gauge. The bank marks rotate around the edge of the instrument.

3. Altimeter Measures altitude in feet above sea level. The gauge is operated by *atmospheric pressure*. The *altimeter* is read like a clock, with 10 divisions instead of 12. The large hand indicates hundreds of feet above sea level (with increments of 20 feet), and the small hand indicates thousands of feet above sea level. The small marker near the outside of the gauge indicates tens of thousands of feet above sea level.

Sea level is not the same as ground level. At an airport with a 750-foot elevation, the altimeter registers 750 feet while the plane is sitting on the ground.

Barometric pressure changes, caused by changes in the weather, can cause errors in altitude readings. Pilots must often calibrate this gauge to the barometric pressure of the *airspace* through which they are flying. Pilots in the U.S. calibrate to the current air pressure at sea level in inches of mercury, while flyers in Europe calibrate to pressure in millibars. At altitudes above 17,999 feet, you must calibrate to *standard pressure*, which is 29.92 inches of mercury, or 1013 millibars.

The knob marked with an "A" is the altimeter adjustment knob. To adjust barometric pressure to the current correct value, press the A key, or, if using a mouse, point at the knob and click the left mouse button. Barometric pressure is indicated in the small square window (the Barometric Pressure window). On Flight Simulator, this window is too small for the digits to be plotted, so the window is shown with fixed predesigned digits.

4. Turn Coordinator Measures turn rate and coordination. No numerical value appears on this gauge. Instead, a single turn rate position is marked by the turn indicator (the small airplane symbol on the gauge). When the gauge aligns with the "L" (Left) or "R" (Right) indicator, a two-minute turn results. This means that the plane will complete a 360-degree turn in two minutes. The turn coordinator, unlike the turn indicator gauge used in some planes, uses a 35-degree *canted gyroscope* that reflects both bank and *heading* changes. Pitch, however, has no effect on the gauge. The turn indicator is also useful for timed turns.

The ball in the turn coordinator indicates *slip/skid* attitude, or aircraft coordination. When the ball is centered, the aircraft's longitudinal axis is parallel to the direction of flight and the flight is *coordinated*. Coordinated turns are the safest turns. Some maneuvers (notably slips and skids) are not coordinated.

5. Heading Indicator or Directional Gyro Notes the direction of flight. The *heading indicator* is a gyroscopically controlled compass that, unlike a *magnetic* compass, has no inherent direction-seeking characteristics. It is much more responsive and steady than the magnetic compass. Using the magnetic compass, calibrate the heading indicator before each flight and a few times an hour while in flight.

The knob marked with a "D" is the heading indicator adjustment knob. To set the heading indicator, press the D key, or, if using a mouse, point at the knob and click the left mouse button. Always be sure that the magnetic compass has "settled down" after a turn or climb-to-level transition to avoid setting a wrong heading.

6. Vertical Speed or Rate of Climb Indicator Measures *rate of climb* or descent in hundreds of feet per minute. This gauge operates on air pressure changes and is not adversely affected by absolute barometric pressure. It lags slightly behind the aircraft's responses; avoid "chasing" (flying in direct response to) the vertical speed indicator to establish a constant altitude.

Other Flight Instruments and Indicators

7. Magnetic Compass A standard magnetic compass.

8. Omni-Bearing Indicator (OBI) with Glideslope (NAV 1) A landing approach and general navigation instrument that is used with the *NAV* 1 (Navigation) radio to tune into *VOR* (Very high frequency Omnidirectional Range) radio beacons.

9. Omni-Bearing Indicator (NAV 2)/ADF Same as above, but used with the NAV 2 radio. A *glideslope* is not available on this OBI. ADF can be selected to occupy this position.

10. Clock A standard digital clock that runs in real time and measures hours, minutes, and seconds. Under 1982 FAA regulations, a digital presentation qualifies for IFR flight in lieu of an analog sweep second-hand clock. The Flight Simulator clock is very accurate. You set the clock by clicking the digits with the mouse, or by selecting Time set from the Enviro menu.

11. O (Outer), M (Middle), and I (Inner) Marker Lights Indicate when your aircraft is over the outer, middle, or inner marker beacons during instrument landing approaches.

12. Left Wing Fuel Tank Gauge

13. Right Wing Fuel Tank Gauge

14. Oil Temperature Gauge

15. Oil Pressure Gauge

16. Tachometer

Radios

17. NAV 1 Radio A *NAV* radio is a 200-channel radio used to tune in and identify VOR (Very high frequency Omnidirectional Range) navigation aids. It also receives *ILS* (*Instrument Landing System*) frequencies.

The NAV radios receive frequencies between 108.00 and 117.95 MHz, with 50 kHz separations. VORs are radio stations that transmit an omnidirectional synchronization signal. This synchronization signal is followed by a circular sweeping directional signal. The NAV receiver in your aircraft decodes these signals to determine the angle or *radial* you are on. Radials are directional beams that radiate from the VOR station. The NAV receiver also controls the *Omni-Bearing Indicator* (items 8 and 9), which you can use to guide your plane along radials as you move toward or away from VOR stations.

18. NAV 2 Radio Two NAV radios are provided. The description of this radio is the same as the description of the NAV 1 radio. Two VOR stations can be tuned simultaneously so you can crosscheck your position.

19. Distance Measuring Equipment (DME) This works in conjunction with the NAV 1 and 2 radios to tell you how many nautical miles you are from a tuned-in VOR.

20. Automatic Direction Finder (ADF) A general navigation instrument that is used with nondirectional radio beacons (NDBs) or commercial AM radio stations to determine relative bearing. Magnetic bearing to the NDB can be calculated by adding the relative bearing to the aircraft's magnetic heading.

21. COM Radio A 360-channel transceiver that receives and transmits at frequencies between 118.00 and 135.95 MHz, with 50 kHz separations. The Flight Simulator COM radio is used as a receiver only. Airport, weather, and approach information can be received by tuning in *ATIS* (Automatic Terminal Information Service) at most major airports.

22. Transponder A radio that is used to identify your aircraft on Air Traffic Control (*ATC*) radar.

Control Position Indicators

23. Aileron Position Indicator Indicates the position of the ailerons. The ailerons are *airfoils*, located on the trailing edge of the wing, that control the movement of the plane on its longitudinal axis. When the arrow on the indicator is aligned with the center mark, the ailerons are centered. When the arrow points to the right of the center mark, right aileron is applied, causing the plane to bank right; when the arrow points to the left, left aileron is applied, causing the plane to bank left.

24. Elevator Position Indicator Indicates the position of the elevators. Elevators are airfoils that control the movement of the plane on its lateral axis, pitching the plane (nose) up and down. When the indicator arrow is aligned with the center mark, the elevators are centered. When it is above the center mark, the elevators are raised; when below, the elevators are lowered.

25. Rudder Position Indicator Indicates the position of the *rudder*. The rudder controls the rotation of the plane about its vertical axis (left or right rotation). The rudder position indicator works just like the aileron position indicator. In *Auto-coordinated* Flight mode, the aileron and rudder position indicators work as a unit.

26. Throttle Position Indicator Indicates how much throttle is applied.

27. Elevator Trim Indicator Indicates elevator *trim* setting.

Indicator Boxes on the Control Panel

28. Carburetor Heat Indicator Indicates whether the carburetor heat is on or off.

29. Gear Indicator Indicates whether the *landing gear* is lowered or raised.

30. Flap Position Indicator Shows the position of the *flaps*.

31. Magnetos Indicator Indicates whether the left and right *magnetos* (engine ignition coils) are on or off. The magnetos can be switched on individually (left or right) or simultaneously (both). The magnetos indicator also acts as a carburetor mixture lean indicator for engine shutdown.

32. Lights Indicator Indicates whether the *running lights* and instrument lights are on or off. Running and instrument lights should be turned on at night so the plane is visible to other air traffic and ground observers and so you can see the instrument panel.

33. Strobe Indicator Indicates whether the plane's white flashing strobes are on or off.

34. Zoom Indicator Indicates the zoom factor of the selected window, which is bordered in white.

35. Autopilot Status Indicator Indicates whether the autopilot is on or off.

Heads Up Display Indicators

The following indicators appear in the 3-D window and can be switched off for a clear 3-D view, or turn on only momentarily when an extraordinary event occurs.

36. Axis Indicator This is a bar with a V-shape that shows the current axis of the aircraft. This bar gives a good indication of where the aircraft is pointing, especially when in unusual attitudes. Note, however, that this indicator shows where the aircraft's center is pointing, not necessarily the direction the aircraft is flying. The axis indicator can be toggled on and off by selecting Axis indicator on the Views menu.

37. Stall and General Warning Indicator This indicator comes on (in addition to an audible warning) when the aircraft is less than five knots above stall speed (the speed at which the aircraft stops flying and falls out of the sky). Other messages can also appear here that tell of emergency conditions, such as the Gear Up warning.

38. Brakes Applied and Status Indicator This indicator tells you that brakes are currently applied. Messages concerning current program status, including Demo and Pause, also appear here.

2 Aircraft Controls

Flight Simulator, like a real aircraft, has many controls: engine function controls, flight controls, and navigation and communication radios. All the controls are necessary for safe, efficient flight, but only the primary flight controls are needed to get you flying.

The first steps in getting Flight Simulator off the ground are learning about the keyboard and, optionally, the mouse and joystick interactions involved in flying, and then getting proficient at using the primary flight controls. The view controls and secondary controls can be learned later.

Look at Figure 2.1 as you read this chapter. It will help you identify parts of the airplane as the controls are described.

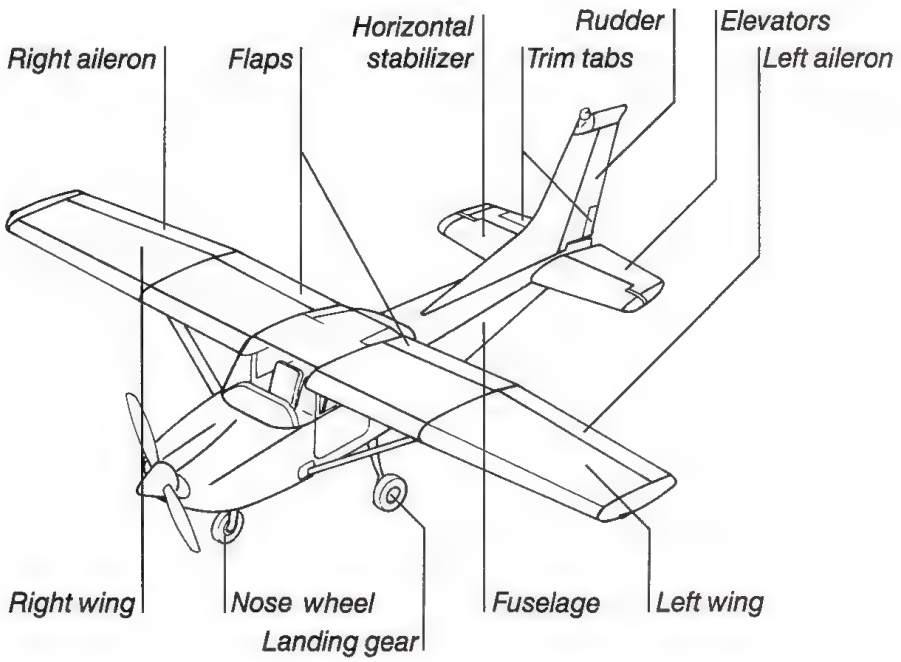

2.1 Basic Aircraft Components

Note A keyboard is all that's needed to control Flight Simulator. A mouse and/or one or two joysticks can also be used to increase realism. For installation and setup information, see Appendix B, "Using a Mouse or Joysticks."

Primary Flight Controls

The primary flight controls include the *control yoke* (a steering-wheel–like control on most planes, a control stick on others), the rudder pedals, the throttle, and brakes.

Control Yoke and Rudder

The control yoke operates the ailerons and elevators, which guide the plane on its course. The ailerons, on the trailing edges of the wings, control the rotation of the plane about its longitudinal axis. Ailerons control bank, or roll, of a plane (see Figure 2.2).

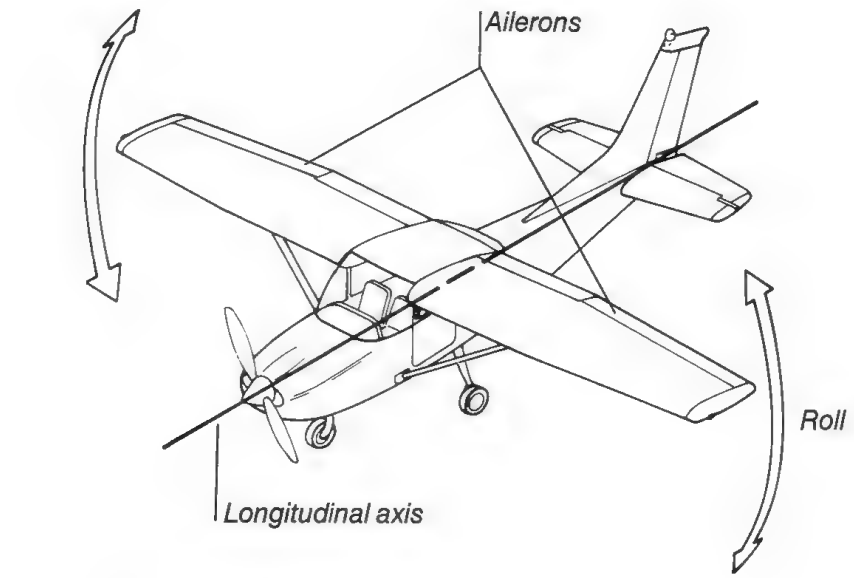

Lowering aileron increases lift and raises wing.

Normal lift

Raising aileron decreases lift and lowers wing.

2.2 Ailerons

The ailerons can be controlled by the keyboard, mouse, or joystick. Figure 2.3 shows the actions required to move the controls and describes the corresponding flight actions.

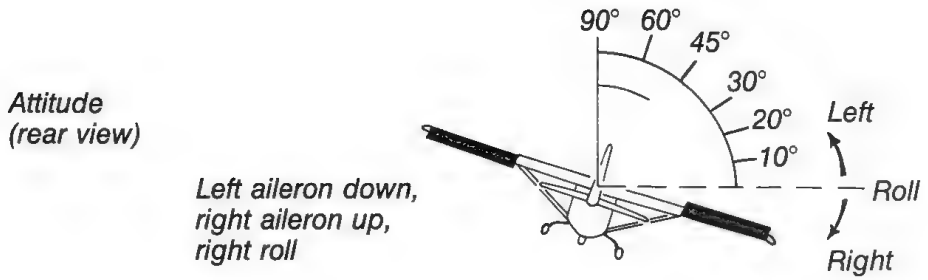

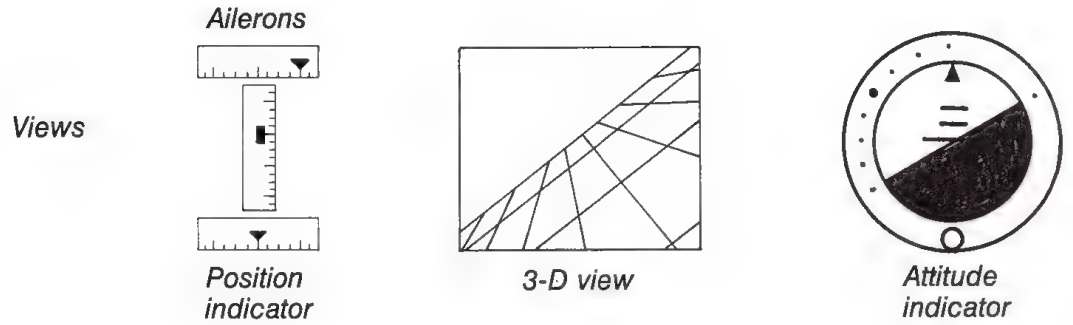

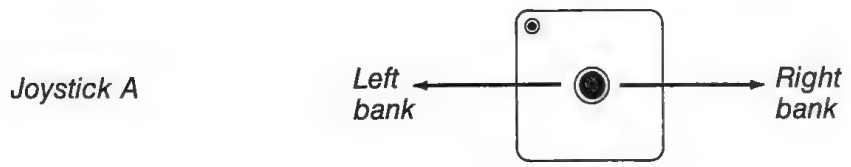

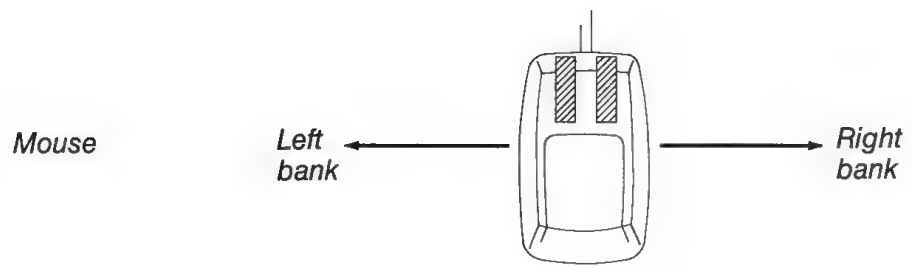

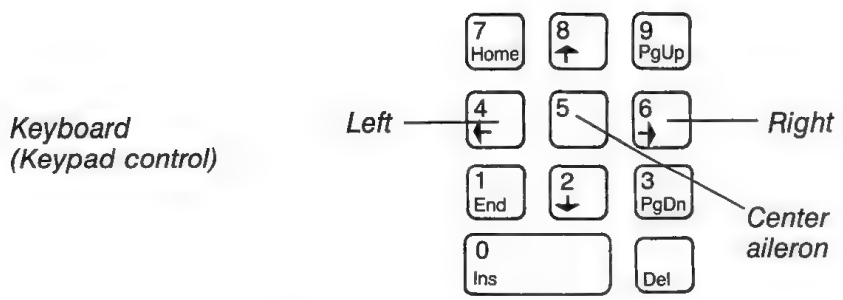

2.3 Aileron Controls and Effects

The elevators, on the trailing edge of the *horizontal stabilizer* (the "rear wings"), control the movement of the plane about its lateral axis (pitch), moving the nose of the plane up or down (see Figure 2.4).

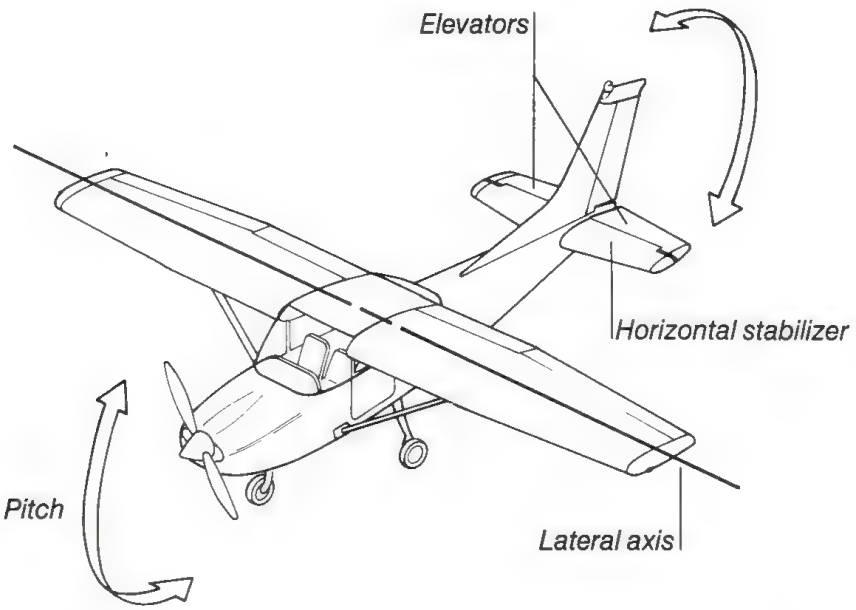

Lowering elevator moves the nose down (by forcing the tail up).

Neutral

Raising elevator moves the nose up (by forcing the tail down).

2.4 Elevators

The elevators can be controlled by the keyboard, mouse, or joystick. Figure 2.5 shows the actions required to move the controls and describes the corresponding flight actions.

When using the keyboard, note that rapid keypresses of the elevator keys make broad, quick adjustments in elevator position. Pressing the elevator keys slowly, with at least one-quarter second between each press, moves the elevators by one-eighth of their normal adjustment for fine elevator control.

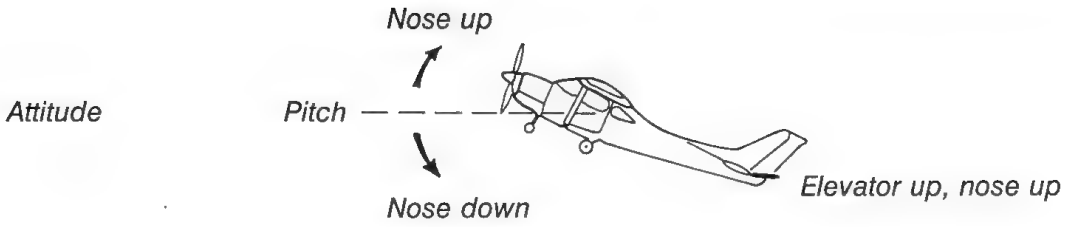

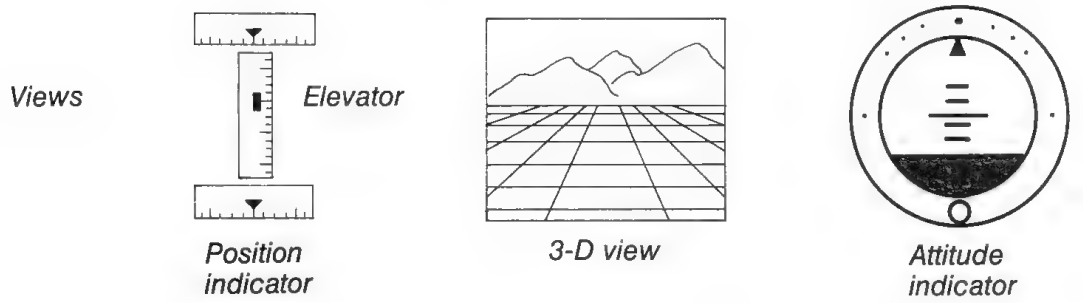

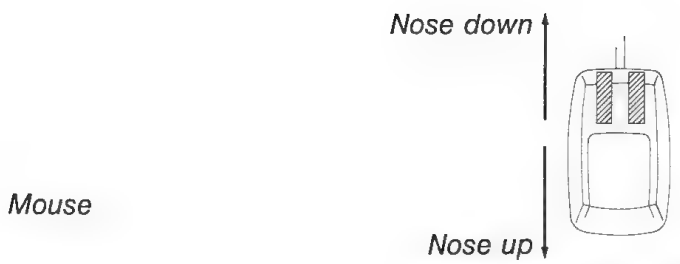

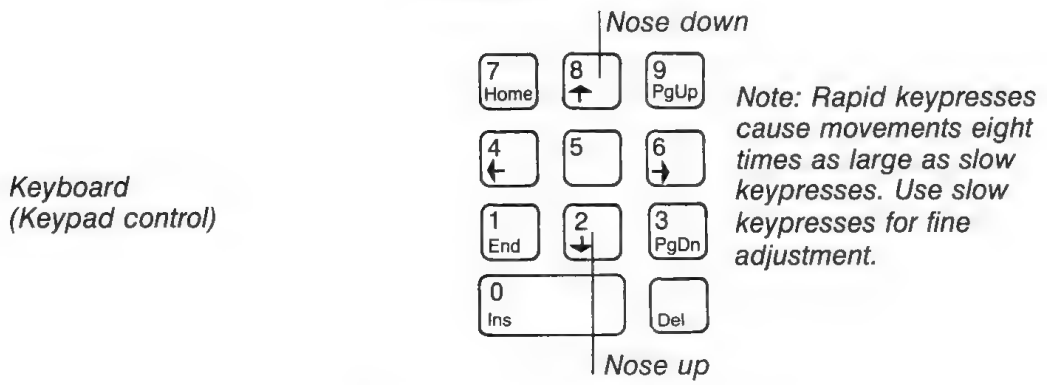

2.5 Elevator Controls and Effects

The rudder, which is located on the *vertical stabilizer* of the plane, controls the movement of the plane about its vertical axis (yaw) (see Figure 2.6).

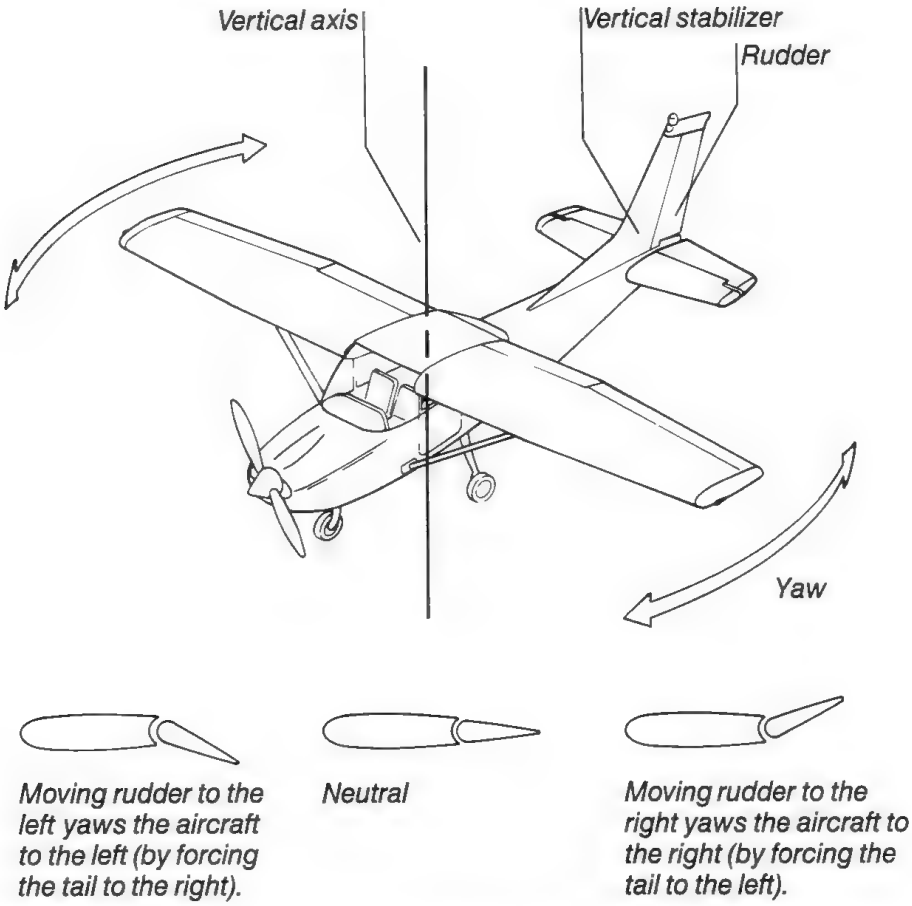

2.6 Rudder

The rudder can be controlled by the keyboard, mouse, or joystick. Figure 2.7 shows the actions required to move the controls and describes the corresponding flight actions.

The rudder controls are the bottom-left and bottom-right keys on the keypad. On some keyboards, the bottom-right key is +; on others, it is ENTER. Ignore the key-cap legend and use the bottom-right key.

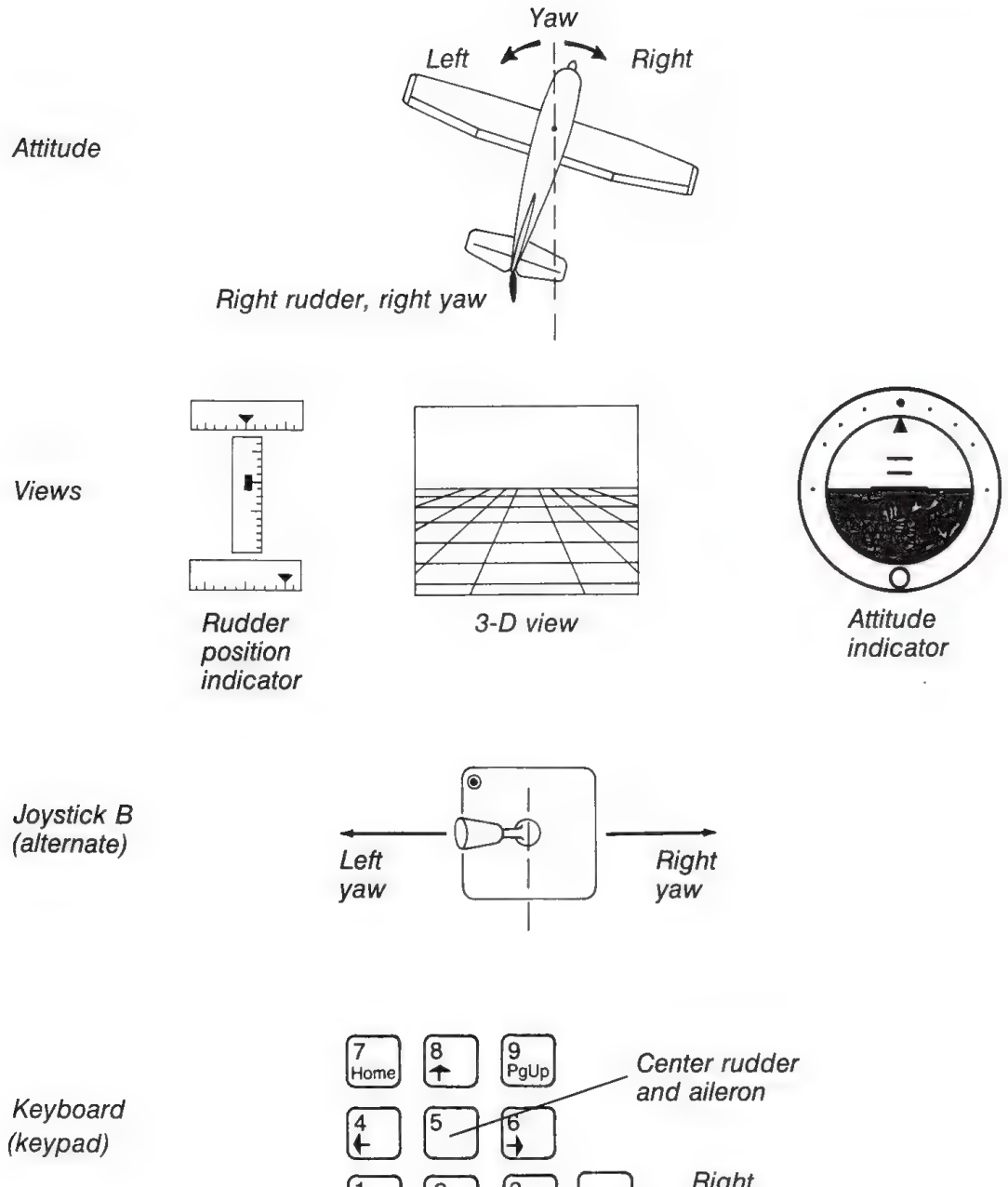

2.7 Rudder Controls and Effects

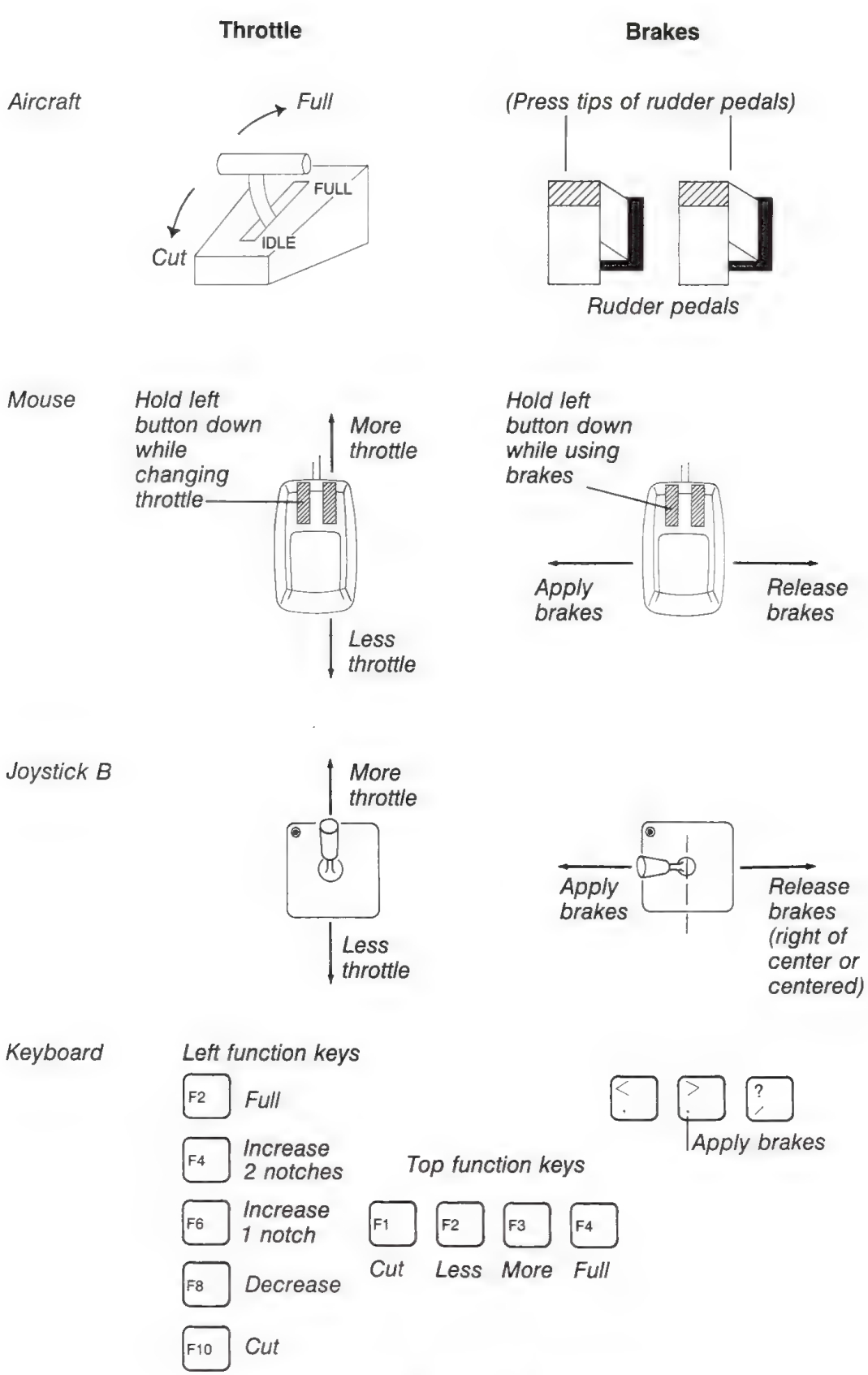

2.8 Throttle and Brake Controls

Throttle

The *throttle* applies power.

The throttle position indicator shows the throttle setting. Figure 2.8 shows throttle operation using the mouse, joystick, and keyboard.

Brakes

The brakes slow the aircraft while it is on the ground. Figure 2.8 shows how to apply the brakes. Press the period (.) key on the bottom row of the main keyboard many times to slow the plane. Each keypress reduces speed by a few knots. When using the keypress brakes, there is no need to release the brakes because they never stay on for more than a few seconds after each keypress.

When the brakes are applied, a brakes indicator appears on the three-dimensional window screen near the bottom center of the screen.

These are wheel brakes only and have no effect in the air. Brakes are automatically released while in the air to avoid landing with them on.

View Controls

Flight Simulator has a sophisticated viewing system that gives you views from the aircraft as well as views of your aircraft as you fly. You control your views and your windows with the keyboard and the Views menu. The following table shows the commands on the Views menu:

Menu option	Used to
1 Window:	Identify and change active window: First 3D, Second 3D, Map.
2 From:	Specify viewing mode: Cockpit, Tower, Track, or Spot.
3 Zoom:	Zoom in/out active window.
4 Direc:	Control viewing direction in Cockpit mode.
5 Axis Indicator:	Turn on/off, or select the shape of the axis indicator on the screen.
6 First 3D	Turn on/off first 3D window.
7 Second 3D	Turn on/off second 3D window.
8 Map	Turn on/off map window.
9 Full screen tower view	Turn on/off full screen view when tower is selected.

Menu option	Used to
A Titles on windows	Turn on/off titles at the top of the 3-D windows.
B Shader	Turn on/off shading (off means aircraft and scenery drawn with lines only).
C Setup windows	Move, size, turn on/off windows.
D Set Spot Plane	Specify where spot plane flies and how it follows you when you do aerobatics.

Window selection:

Zoom:

{ [— *First 3-D*

}] — *Second 3-D*

Num Lock — *Map*

Select the window, then press — *In* — *Out* — *1X*

— - | + = | ← Backspace

View mode:

S — *sequences through Cockpit, Tower, Spot, and Track on selected window.*

View Direction:

SCROLL LOCK *followed by view direction on numeric keypad.*

7 Home | 8 ↑ | 9 PgUp
4 ← | 5 Down | 6 →
1 End | 2 ↓ | 3 PgDn
0 Ins | Del

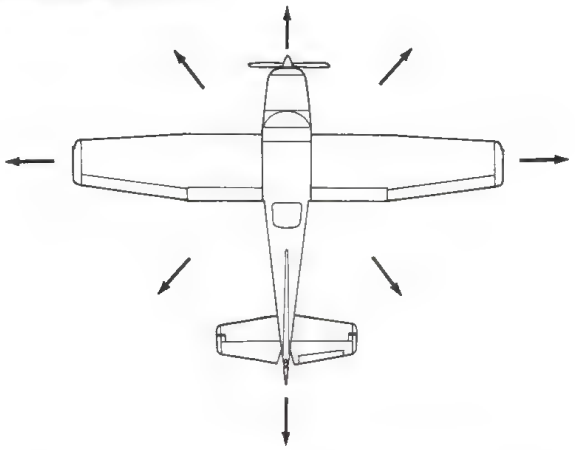

Note: Pressing SCROLL LOCK *puts you into Cockpit view mode.*

2.9 Window and View Controls

Selecting the Active Window

You can have two 3-D windows on the screen, each viewing a different angle, and with a different zoom factor. You can also have a Map window on the screen, which allows you to look at a map of the area over which you are flying or taxiing. This is particularly useful in navigation and taxiing around airports.

Only one window is active, or selected, at any time. The name of the active window appears after the Window: option on the Views menu. When you want to change a window's view, angle, zoom, or view direction, that window must be the active window. The selected window is outlined in white, while the other windows are outlined in black.

Select Window: on the Views menu to cycle through the windows (First 3D, Second 3D, and Map), changing the active window.

You can also select a window using the keys:

Press	**To select**
[	3-D window one
]	3-D window two
NUMLOCK	Map window

Selecting the View Mode

Selecting From: on the Views menu, or pressing the S key, cycles through Cockpit, Tower, Track, and Spot view modes. These views have the following characteristics:

View mode	**What you see**
Cockpit	You are looking out of the aircraft's windshield.
Tower	You are looking out from a stationary control tower. This mode automatically tracks your movements, keeping you in view.
Track	You are looking from the ground base, which is not more than five miles from you. In multi-player mode, you are visually tracking the other player.
Spot	You are looking at your airplane, as viewed from a spotter aircraft flying next to you (or behind, below, or in front of you). Use the Set Spot Plane menu to specify where the spotter aircraft will fly.

The title bar above the three-dimensional window tells the view mode. Pressing SCROLL LOCK to choose view direction always puts the active window into Cockpit mode. When flying with only one window, you can alternate between Cockpit and Tower modes using the S key and SCROLL LOCK.

Zoom Control

In all view modes, you have a Zoom control. The two 3-D windows and the map window can be zoomed. The zoom control keys affect only the selected window.

The Zoom option on the Views menu and the zoom indicator on the control panel tell the zoom factor of the selected window. You can zoom in or out (change your field of view) by pressing the window selection key ([,], or NUM LOCK), followed by the + or – key on the keyboard, not the numeric keypad (see Figure 2.9). If you choose Zoom from the Views menu, you select the active window for zooming. The +, –, and BACKSPACE keys can then zoom the active window.

When landing, taking off, or doing aerobatics, make sure the Zoom control is on 1X, which is one-times magnification or normal field of vision. Press the window selection key followed by the BACKSPACE key. View distortion in wide angle and telephoto views can affect your sense of direction and movement.

To select and zoom any window:

Press	To zoom
[+ or –	3-D window 1
] + or –	3-D window 2
NUM LOCK + or –	Map window

Note Remember that once you have selected a window, you can zoom in or out (press + or – many times) without selecting the window again.

Selecting View Direction

In Cockpit mode, you can view in nine directions. Use the Views menu or the keypad to select the view direction.

On the Views menu, select Direc: to cycle through the nine view directions. The selected direction appears after Direc: on the menu.

To use the keyboard, press SCROLL LOCK followed by the view direction key on the numeric keypad to select view direction on the active window (see Figure 2.9).

Note On newer keyboard designs, the SCROLL LOCK key is far from the keypad and is awkwardly placed for view direction selection. On these keyboards, pressing * or / next to the keypad serves the same function as SCROLL LOCK.

Moving and Sizing Windows

Selecting Setup Windows from the Views menu activates a menu used to set the size and positions of windows. This menu shows five windows that can be moved and/or sized.

Window option	Description
1 3D One 2 3D Two	These are the two 3-D windows, which are independent and can be set for different views (cockpit in one window and tower in the other, for example).
3 Map	This is the map window, which displays a map of the area over which you are flying.
4 Control Panel	The control panel is considered a window so you can move it up and down.
5 Position Indicator	The control position indicator window is a small window that shows the position of the flight controls (elevator, throttle, aileron). This window is useful when flying with a full screen 3-D view without a control panel.

All windows can be turned on and off and moved (the panel can only slide down). The two 3-D windows and the map can be adjusted to any size.

Moving Windows with the Keys

1. On the Setup Windows menu, select the Move option appropriate for the window you want to move.
2. Use the keypad direction keys to move the window to the left or right. The Setup Windows menu will disappear. The control panel can only slide up and down.
3. When the window is moved, press ESCAPE or ENTER to get the menu back.

Moving Windows with the Mouse

1. Point at the very top of the window.
2. Press and hold down the left mouse button, and drag the window to its new position.

Unlike many window systems, Flight Simulator windows have no title bars to drag. Simply remember to drag the top of the window.

Spot Plane Control

Spot plane distance and direction are adjusted by choosing Set Spot Plane from the Views menu. Set the spot direction (the position where you want the spotter aircraft in relation to your plane) by either dragging the "view box" (the small box near the aircraft on the menu) to the desired position, or pressing the keypad direction keys to move it. The view box shows the position of the spot plane.

Spot distance and altitude are adjusted by clicking or selecting menu options one and two. This determines how far from you the spotter aircraft will fly. Type the distance and altitude in the left column. The right column shows your original settings.

Spot altitude is the difference in altitude between the spotter pilot and yourself. Positive values place the spotter at a higher altitude than your plane. Negative values place the spotter below you. The spotter can never go below ground level. Dramatic landing views can be generated by placing the spotter slightly below and to the side of you.

The spotter plane positions itself in the direction and at the distance you set in the Set Spot Plane menu (for example, 1750 feet off your left wing and 150 feet above you). When you do aerobatics, the spotter plane's position can change. When you bank the plane steeply and roll upside down, the wing that was pointing east suddenly points west. The spotter plane must switch to your other side if it is to match what you have set in the Set Spot Plane menu. If the spotter plane is jumping from side to side, you will have a hard time watching yourself do aerobatics. A similar situation occurs when you do a loop (pitch upward, then go all the way over).

Options 3 and 4 in the Set Spot Plane menu help solve these problems: Preference (Roll or Loop) and Transition (Slow or Fast). You can set them for the kinds of visual special effects you want. Select Preference first, then Loop or Roll. If you select Roll, the spotter plane flies relative to your heading, not to your wingtip. When you roll, your heading remains the same, and the spotter plane will track you from one side, letting you watch the complete roll. Loops will still cause a problem though, because as you go "over the top" your heading abruptly changes by 180 degrees. To watch yourself do loops, select Loop. The spotter plane will track relative to your wingtip direction (which doesn't change during a loop).

With both Roll and Loop, there are times when the spotter plane must change sides. Rather than changing sides abruptly, the spotter plane gradually moves to the other side, keeping you in view all the while. Think of the spotter plane as a fellow pilot filming you with a movie camera — he must fly to your other side. This crossover creates dramatic visual effects. You can set the crossover time by setting Transition in the Set Spot Plane menu to Slow or Fast.

Secondary Aircraft Controls

The primary flight controls are the only controls needed to fly the plane. The secondary controls are used to navigate and to control the engine and the simulator itself. Their positions on the panel and their functions are described in Chapter 1, "Basic Window Display and Flight Instruments." A description of how to use these follows. If this is your first flight, you may want to return to this section later.

Flaps

Flaps are movable panels on the inboard trailing edges of the wings. They are hinged so they can be extended downward into the flow of air beneath the wings to increase *lift* (upward force) and *drag* (rearward pull). Their primary purpose is to permit a slower airspeed and steeper angle of descent during a landing approach. They can also be used to shorten takeoff distance or decrease stall speed on a landing approach.

You can adjust the flaps with the keys or the mouse. Figure 2.10 shows the flap controls. Flaps in the Up position are totally retracted; in the 40-degree position, they are totally extended.

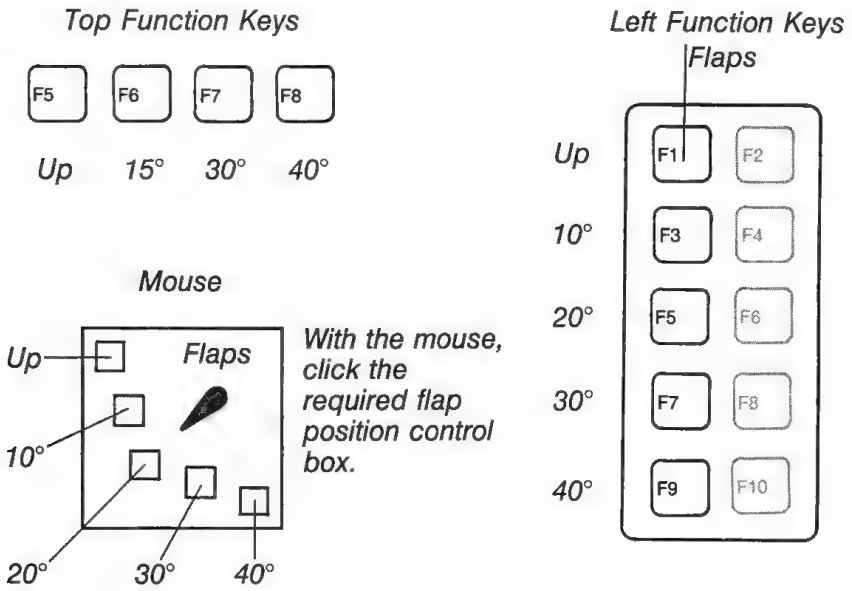

2.10 Flap Controls

Extending and retracting the flaps affect the plane's performance considerably. Extending the flaps increases both lift and drag. This increases glide angle, which is particularly useful if you are flying too high on an approach and want to increase your rate of descent. Airspeed can be reduced by extending the flaps.

Elevator Trim

The control yoke is directly connected to the airfoils it controls. Different flight attitudes put different pressures on the airfoils. These variations also change the pressure on the yoke. The pilot must counteract these forces to keep the airfoils in their proper positions. Applying steady pressure on the yoke for hours would be fatiguing. *Trim* is used to counteract these forces and relieve the pilot of applying constant pressure on the yoke.

In Flight Simulator, elevator trim is controlled with the 7 and 1 keys on the numeric keypad (see Figure 2.11). Pressing the 7 key adjusts the trim downward. Pressing the 1 key adjusts the trim upward. The elevator trim position indicator shows elevator trim position. Remember these keys as the upper-left and lower-left keys of the control yoke.

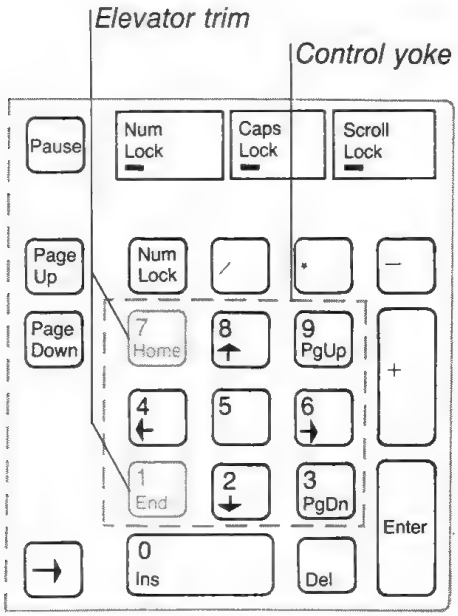

2.11 Elevator Trim Controls

Carburetor Heat

Carburetor heat is used to preclude icing or to clear ice that has already formed in the carburetor. Apply carburetor heat for a few seconds on landing approach to avoid ice-caused engine failure.

The H key is the carburetor heat toggle switch. The carburetor heat indicator on the control panel shows whether carburetor heat is on or off.

Carburetor heat can be toggled on and off by clicking the panel indicator with the mouse.

Magneto Switch and Mixture Full Lean Control

The M key is the magneto switch. After you press the M key, type one of the following numbers (in the top row of keys on the main keyboard) to indicate magneto setting:

Number	Result	
1	OFF	Magnetos off
2	L	Left magneto on
3	R	Right magneto on
4	B	Both magnetos on
5	ST	Start engine, then both magnetos on
0	LN	Mixture full lean (engine off)

The "M12" below the magneto indicator acts as a reference to the M key, followed by numbers 0 through 5.

Lights

The lights key (L) turns on the running and instrument lights, and the red, rotating beacon. *Running lights* are lights on the tip of each wing — red on the pilot's left, green on the pilot's right — that help others identify your heading. Instrument panel lights illuminate individual instruments on the instrument panel so that you can see them at night. You must turn on the running and instrument panel lights for night flight.

It is not advisable to fly with your lights on during the day. When night arrives you may find that a bulb on an important instrument has burned out. Bulbs are replaced during refueling and service stops.

The "L" next to the lights indicator acts as a reference to the L key.

Strobe

The O key turns the aircraft's white, flashing strobe on and off. The indicator on the instrument panel shows the current status.

It's important to simulate a strobe light because of the effect it can have on a pilot in the clouds at night. Big, white flashes of light are diffused into the cockpit by the clouds, disorienting the pilot.

If you fly through clouds at night, turn off the strobe light.

The "O" next to the strobe indicator acts as a reference to the O key.

Landing Gear

The landing gear key (G) raises and lowers the landing gear. The gear indicator on the panel shows the current status of the landing gear. You do not have to raise the landing gear when flying. If you do raise it, however, be sure to lower it on landing approach. Flying with the landing gear down increases drag and slows you down.

The "G" next to the gear indicator acts as a reference to the G key.

Radio Operation

VOR Navigation Radios (NAV 1 and NAV 2)

The NAV radio is an important navigational aid. It is used to tune in VOR radio beacons so you can fly toward or away from them. Two NAV radios are provided so that you can tune in two VOR beacons at once. This is useful for doing cross-checks of your position.

You must set the NAV radio to the VOR frequency to receive the appropriate signal. On a real aircraft, two knobs are used to set the frequency. One sets the full megahertz (MHz) frequencies (121, 122, 123, etc.), and the other sets the fractional frequencies in 50 kilohertz (kHz) increments (.00, .05, .10, etc.). Many new radios are 720-channel models with 25 kHz increments, but none of these intermediate frequencies are implemented on Flight Simulator.

Setting the NAV Radio

1. Press the NAV key (N).
2. Press the radio number (1 for NAV 1 and 2 for NAV 2).
3. Press the + or – keys (on the main keyboard, not the numeric keypad) to advance or move back the current setting until you reach the desired MHz frequency.
4. Press the N key twice, in rapid succession, then press either the + or – key until you reach the appropriate setting, to set the fractional frequency (.00, .05, .10, etc.).

Pressing the radio number after the N key is necessary only if you want to tune a NAV radio other than the one you most recently tuned.

For example, to advance from 111 to 116 MHz, press N+++++. To go from .55 to .35, press NN-----. For more information on using the NAV radio, see "VOR Navigation" in Chapter 14, "Navigation Course."

The NAV radios can also be set from the menus (select NAV/COM, then NAV Radio and the desired frequency advance options).

To set NAV frequencies using the mouse, point to the right or left of the digit you want to change on the instrument panel. Click the left button to decrease (left side) or increase (right side) the NAV frequency.

The NAV 1 radio is also used to tune in ILS localizer and glideslope. For detailed information about instrument flying, consult an instrument flight training manual.

Omni-Bearing Indicator (OBI)

The OBI is used with the NAV radio to tune into VOR (Very high frequency Omnidirectional Range) radio stations. VORs are radio stations that transmit an omnidirectional synchronization signal followed by a circular sweeping directional signal. The NAV receiver in the aircraft decodes these signals to determine what angle or radial you are on. Radials can be thought of as directional beams radiating outward from the VOR station like spokes of a wheel.

The OBI or VOR indicator is a panel-mounted instrument that lets you determine what VOR radial your plane is currently on. It also helps you fly along radials toward or away from the VOR station.

Two OBIs are provided. The top OBI (Figure 1.1, item 8) corresponds to the NAV 1 radio. The bottom OBI (Figure 1.1, item 9) corresponds to the NAV 2 radio.

Setting the OBI

1. Press the VOR key (V).
2. If you want to adjust an OBI other than the one you most recently adjusted, press 1 for the top OBI, or 2 for the bottom OBI.
3. Press the + or – key as needed to select the right course and reciprocal course readings.

   Each keypress adjusts the course selector by two degrees. Holding down the + key rapidly sequences through the degree settings.

The letter "V" on the knob of the OBI indicator refers to the V key. The OBIs can also be set from the NAV Radio menu under the NAV/COM menu.

Change OBI setting using the mouse by clicking on the OBI adjustment knob. Click the left side of the knob to decrease and right side to increase the heading digit values.

OBI 2 and the ADF indicator share instrument panel space. For information about switching between OBI 2 and ADF, see "ADF/VOR Selector" below.

DME Source and Ground Speed

The NAV 1 radio is the usual "source" for the DME. DME tells you how many knots you are from the station tuned on NAV 1. You can select NAV 2 as an alternate source for DME by pressing the B key. There is a number and a B next to the DME marking on the panel (see Figure 1.1). The number indicates NAV 1 or 2 as source, and the B reminds you to use this key to switch DME source.

DME measures velocity to a station, too. If you are flying exactly toward a station, this is your ground speed. To get a velocity readout, press F. The F next to the DME legend (see Figure 1.1) reminds you of the key to press. The ground speed will appear for a few seconds, then the display will revert to distance to station.

ADF Navigation Radio

The ADF (Automatic Direction Finder) is a system that lets you home in on non-directional radio beacons. A three-digit frequency code can be set on the ADF receiver. Before using the ADF, the instrument must be activated. When activated, the ADF indicator replaces the OBI 2 (NAV 2 indicator) on the instrument panel (there isn't enough room for both). Activate the ADF by choosing Activate on the ADF menu. (ADF is on the NAV/COM menu.) Then select ADF by pressing N2. Set the frequency by pressing N (left digit), NN (center digit), or NNN (right digit), followed by + or – keypresses; or use the mouse by pointing at the individual digits and clicking the left button.

ADF/VOR Selector

There is not enough room on the instrument panel for two Omni-Bearing Indicators and an ADF needle gauge. You can choose to have an ADF needle gauge in the lower OBI gauge position. From the NAV/COM menu, select NAV Radio or ADF, then select Activate. The appropriate gauge will appear in the lower OBI gauge position.

Communications Radio (COM Radio)

Use the COM radio to tune into ATIS for weather, airport, and approach information. The charts at the back of this manual note the ATIS frequencies for each airport at which ATIS service is available. The same procedure that is used to set NAV radio frequencies is used to set the COM radio. When using the keyboard, press the C key instead of the N key to select COM frequencies.

Transponder

On occasion, Air Traffic Control (ATC) will ask you to transmit a four-digit code or "squawk." The message from ATC will scroll across the top of your screen. ATC will use the number your transponder transmits to track you on its radar screen.

To adjust the transponder, press T (left digit), TT (second digit), TTT (third digit), or TTTT (fourth digit), followed by + or – keypresses to advance or decrement the selected digit. Use the mouse by clicking the digit you want to change. The four digits adjust separately.

Flight Instrument Calibration

Altimeter

To set the altimeter to the current barometric pressure, press the altimeter key (A). The altitude reading may change when you do this. We recommend that you do this several times each hour in reality mode to ensure accurate altimeter readings.

The letter "A" on the altimeter's adjustment knob refers to the A key. Clicking on the altimeter adjustment knob also adjusts it.

Heading Indicator (Directional Gyro)

Pressing the Directional Gyro key (D) sets the heading indicator to the same reading as the magnetic compass. The magnetic compass does not drift with time as the heading indicator does, and it will always show a correct reading when "settled down" after a turn. Always be sure the magnetic compass has settled down, to avoid setting an incorrect direction.

The letter "D" on the heading indicator's adjustment knob refers to the D key. Clicking on the Heading Indicator knob also adjusts it.

3 Flying the Single-Engine Aircraft . . . 45
4 Flying the Business Jet . . . 53

Flying Flight Simulator

In this section, you learn the basics of flying a single-engine aircraft and a business jet.

Chapter 3, "Flying the Single-Engine Aircraft," tells you about your aircraft and its instruments, then teaches you how to taxi, take off, climb, turn, and land.

Chapter 4, "Flying the Business Jet," explains the instruments and controls for the Gates Learjet 25G, and gives you a few flight techniques.

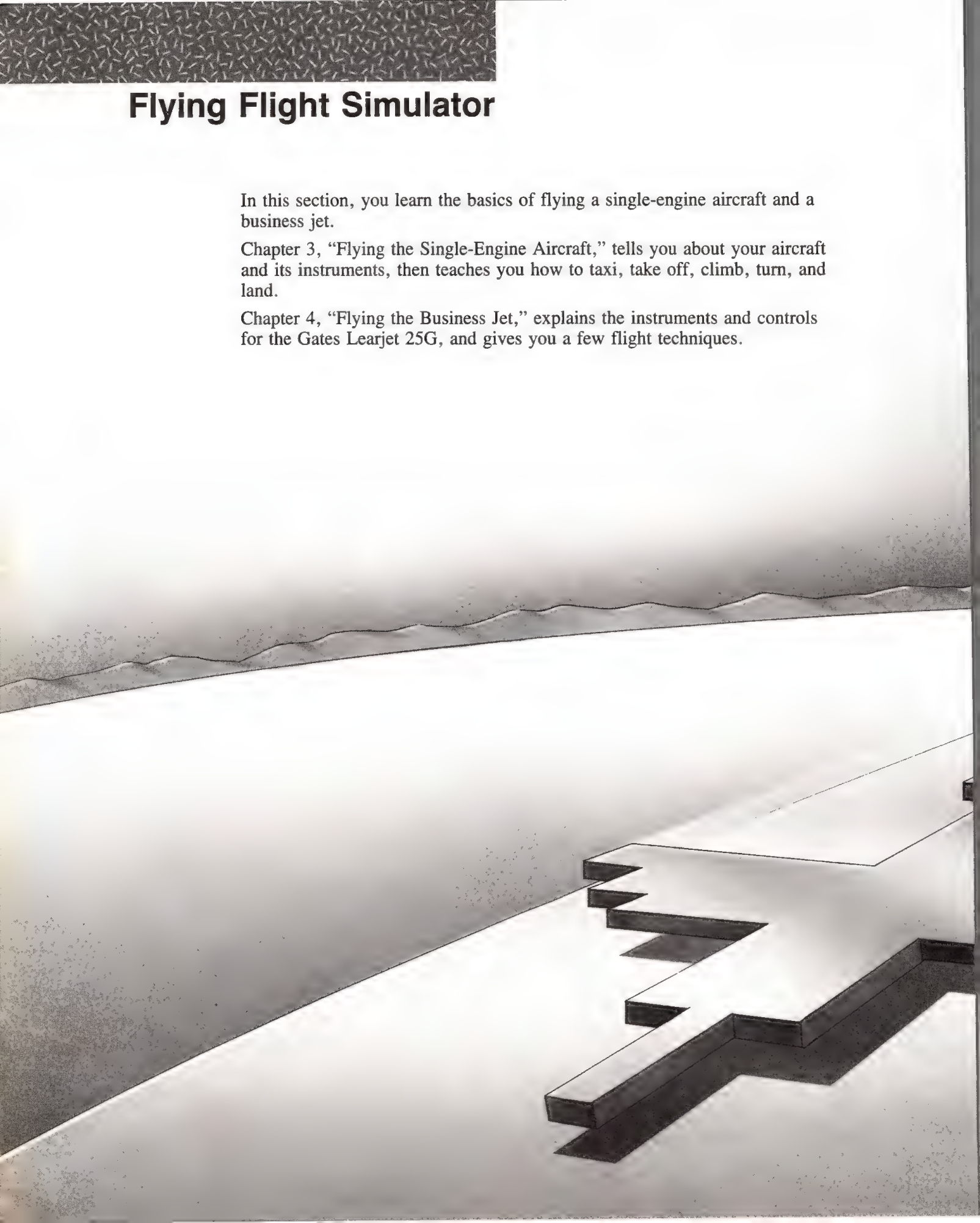

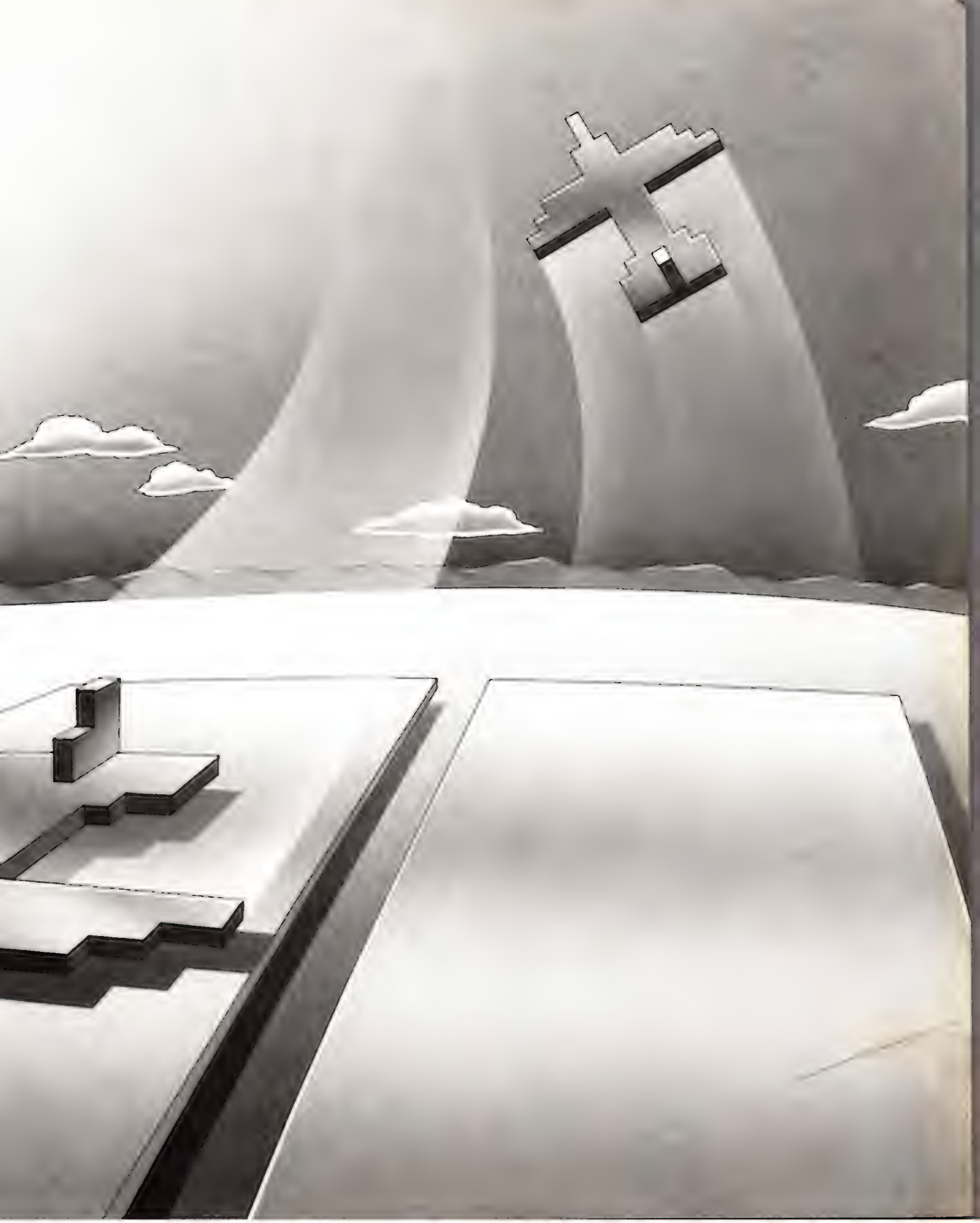

3 Flying the Single-Engine Aircraft

The single-engine aircraft simulation attempts to simulate accurately the actions and responses of a real aircraft. The Flight Simulator aircraft is closely patterned after a Cessna Turbo Skylane RG II (basically a 182 with retractable landing gear, turbo-charged engine, and other performance modifications). Some of the engine and prop control complexities are not included in the simulation. For more information about this aircraft's performance specifications, see Appendix A, "Performance Specs."

This chapter takes you through the basics of flight. The procedures you follow give you a gradual introduction to your aircraft and tell you how to check instruments, taxi, take off, climb, turn, and land.

Keyboard control is used throughout this tutorial. If you have a joystick or mouse, use the corresponding actions on these devices.

Flying Under Visual Flight Rule (VFR) Conditions

When you start Flight Simulator, you are facing north on the runway at Meigs Field (a small field on a peninsula extending into Lake Michigan) in Chicago (see Chart 2 in your area maps, included with this manual). The John Hancock building is on the horizon to your left (northwest). You will take off and climb out over Lake Michigan.

You are lined up for immediate takeoff. The weather is fair. The sky is blue and the ground light green, indicating a clear day without a cloud in the sky. There are no winds. This is perfect weather for Visual Flight Rule (VFR) flying.

When you fly VFR, you rely on ground references and the visible horizon for orientation and navigation. Until you get off the ground, navigation is secondary to flight control. The most important instruments for your first VFR flight are the *airspeed indicator* and the *altimeter*. You will use the other primary flight instruments, as well as the aileron, rudder, elevator, and throttle position indicators. For your first flight, concentrate on what you see out the window and how it relates to altitude, airspeed, bank, and pitch attitude.

Getting Familiar with the Aircraft

Take a moment to study the three-dimensional display on your screen. This is the front view out the aircraft's windshield.

Use the view selector to look to the right (press the SCROLL LOCK key and the upper-right key on the numeric keypad). Try other views, then return to the front view by pressing SCROLL LOCK and then the upper-center key on the keypad.

Checking Your Instruments

First, check your altitude. Altitude is measured by the altimeter. Remember that altitude is measured in feet above sea level. Although you have not yet left the ground, the altimeter shows an altitude of 592 feet, the elevation of Meigs Field.

Now, check the compass. It tells you that you are facing 0 degrees. A 270-degree reading corresponds to the aircraft pointing west. Notice the heading indicator. It notes your direction as 0 degrees. The compass and heading indicator provide similar, but seldom identical, readings. Gyroscopic precession and the earth's rotation cause the heading indicator to drift over a short period of time. In reality mode, you must adjust the heading indicator to match the magnetic compass several times each hour by pressing the Directional Gyro key (D).

Your engine has already been started. (It starts automatically when you start the program.) However, you don't have enough power to move. The airspeed indicator does not register a reading until the aircraft has reached a speed of 40 knots. Because the airspeed indicator is not registering a reading and the out-the-window view is not changing, you know your aircraft is standing still.

It is best to use the map window to taxi around the runway. Take this opportunity to experiment with the map window. Activate the map window by pressing the NUM LOCK key. To zoom in on a narrower area, repeatedly press the + key on the main keyboard. To broaden your focus, press the – key.

Moving the Control Yoke and Rudder

Now, experiment with the ailerons. Turn the yoke full left, then full right, using the middle-left and middle-right keys (or Joystick A, or the mouse in Yoke mode). Notice how the adjustments in the ailerons move the aileron position indicator. Try the elevators, paying attention to how the adjustments in elevators move the elevator position indicator. Experiment with the rudder pedals. You must be moving to turn the plane, so for now just see how moving the rudder moves the rudder position indicator. Notice that the rudder and ailerons move together. In Auto-coordinated Flight mode, they are locked together. (You are in Auto-coordinated Flight mode when you begin the program.) In Uncoordinated Flight mode, they move separately. Center the rudder by pressing the center key.

Taxiing Around the Airport

You are on the runway positioned for takeoff. While you are on the ground, all objects on the horizon are viewed edge-on. Everything in your field of vision is clustered on the horizon. If you have not already activated the map window, do so now by pressing the NUM LOCK key. Use the + and – keys to zoom in and out until you get a good view of your position at the airport.

Begin to *taxi* by applying the throttle. For now, one notch is sufficient, so press the Increase Throttle key once.

Use the rudder pedals to steer the plane. Turn the rudder left and right (by pressing the left-rudder and right-rudder keys) to steer the airplane down the runway. Try to stay on the center line. Press the center key (5 on the numeric keypad) to center the rudder and nose wheel quickly, so you can taxi in a straight line.

Practice taxiing around the airport. If you need to make an abrupt stop, cut the throttle and apply your brakes by pressing the Brakes key (.) repeatedly. If you want to roll to a gentle stop, cut the throttle by pressing the Throttle Cut key.

If You Crash

If you crash, your three-dimensional display will go blank temporarily. If you crash into an obstacle or the ground, the word CRASH appears on your screen. If you land in water, the word SPLASH tells you so. In either case, Flight Simulator returns to the preset starting position (the same location you were when you began the simulation).

Pre-Takeoff Check

Now that you know how to taxi, prepare for takeoff. Taxi to either end of the runway (*active runways* have a number at each end). Align your plane with the center line. Cut the throttle and coast to a stop. If necessary, apply your brakes by pressing the Brakes key (.) repeatedly.

Now conduct your pre-takeoff check to see if all systems are go:

- Check elevator operation. Move the elevators up and down and then center them.
- Check the rudder and ailerons in the same way. Center them.

- Check the engine gauges. Make sure the oil pressure is correct. The indicator should be centered between L(ow) and H(igh). Also make sure you have plenty of fuel (check both gauges).
- Finally, check the heading indicator against the magnetic compass. If they do not agree, set the heading indicator to match the magnetic compass by pressing the Directional Gyro key (D) after the magnetic compass has settled.

If all systems are go, you are ready for takeoff.

Takeoff

Before you take off, you may want to read the next sections on straight and level flight, turns, and glides and descents. If you would rather not, don't worry. This is a simulator, after all. You can stop the simulation at any time by pressing the Pause key (P). Press it again to continue.

Turn the map window off by pressing NUM LOCK twice, rapidly. Switch to the forward view by pressing SCROLL LOCK, followed by the upper-center key.

Accelerating down the Runway

Apply full throttle. As you move down the runway, steer with the rudder, adjusting it to keep a steady course and to avoid zig-zagging. (Remember, pressing the center key centers the rudder.)

Notice that the airspeed indicator shows the rise in speed. When you reach 55 knots, raise the nose by pressing the lower-center key rapidly six times. This is the equivalent of pulling back on the control yoke or stick on a real aircraft. Pulling back the control yoke and raising the nose off the ground is called the *rotation*. The runway drops away as you lift off. As your nose pitches up, the vertical speed indicator will register a positive reading.

You are airborne. Reduce the throttle one notch, and prepare for a gentle climb. Look out the back window by pressing SCROLL LOCK and the lower-center key. Return to front view by pressing SCROLL LOCK and the upper-center key.

Climbing

Flight Simulator, like a real aircraft, climbs by itself and does not require constant adjustments. If you took off as directed, you should be climbing steadily. To increase your rate of climb, increase the throttle. Raise the elevators enough to hold a constant airspeed. Raising the elevators converts airspeed into vertical velocity.

Adjusting the Throttle

Do not attempt to increase or decrease climb rate by simply raising or lowering the elevators without adjusting the throttle to maintain constant airspeed. Raising the elevators without increasing the throttle will increase your climb rate for a few seconds, but you will soon lose momentum and your airspeed will drop. This may cause the plane to stall. On the other hand, increasing the throttle without applying the up elevator will increase your speed, but not necessarily your rate of climb. Understanding the relationship among the elevators and throttle adjustments is basic to successful flight. The relationship among speed, vertical velocity, elevators, and throttle is complex. You will come to understand it only through practice.

Straight and Level Flight

Once you have reached an altitude of about 3000 feet, gradually make the transition from climbing to straight and level flight. Lower the elevators and decrease the throttle to attain a reasonable speed (about 120 knots) without gaining or losing altitude. Remember not to chase the vertical speed indicator. Instead, use the altimeter and airspeed indicator as guides, making small adjustments in the throttle and elevators as necessary. Once you have settled into a straight and level flight pattern, your vertical speed reading will drop close to zero.

Check the altimeter periodically to make sure you are not losing altitude. If you are losing altitude, increase the throttle or raise the elevators.

Turns—Using the Ailerons and Rudder

Turns are made by banking and *yawing* the plane in the direction you want to turn. The ailerons are used to bank the plane, and the rudder is used to yaw it (from left to right). In Auto-coordinated Flight mode, the ailerons and rudder are connected, so you use only the ailerons to control your bank.

Move the aileron one notch to the left. You will begin to bank left. Notice how your bank attitude is shown on the attitude indicator. When the bank approaches the 20-degree mark, center the aileron/rudder. Check the attitude indicator and turn coordinator again. You are turning.

You will continue turning at the specified angle until you "roll out" of the turn. Flight Simulator is positively stable and makes provisions for wing *dihedral* effects, so if you don't manually perform a roll out, the plane will eventually straighten itself after a few minutes of flight.

To roll out of a turn, apply the opposite aileron until your attitude indicator shows that you have centered on your course. Timing is the most important factor in rolling out of a turn. As a general rule, apply the opposite aileron/rudder when your heading indicator shows a reading 10 degrees short of your desired *heading*. For example, if you want to proceed on a heading of 180 degrees, begin rolling out of the turn when the compass indicates a 170-degree heading. It takes time to level your position. You are still in a bank while rolling out of a turn, so you will continue to turn even while you level off.

Always check the altimeter when you have completed a turn. Turns cause you to lose altitude: the steeper the bank, the greater the loss. To compensate, raise the elevator as you are turning.

Glides and Descents

Glides reduce altitude with little or no engine power. Proper glide technique is essential to a landing approach.

To climb, you increased the throttle and raised the elevators to increase altitude. It seems logical that to descend you would do the opposite — that is, lower the elevators and decrease the throttle. This is not proper glide procedure, however. When you decrease the throttle, the plane drops its nose. Airspeed increases if you decrease the throttle and either keep the elevators where they are or lower them.

To descend, decrease the throttle, then apply a bit of up elevator to hold constant airspeed and to keep the nose from dropping. Judging how much elevator to use takes experience. Watch the world outside when you decrease the throttle. Also study your pitch attitudes as you glide.

Now, practice gliding. Climb to 5000 feet, level your position, and cut the throttle. You will descend at a rapid speed. If your airspeed gets dangerously high (exceeding 140 knots), raise the elevators one notch. This will raise your nose and help level your dive.

You can also increase the angle of a glide and reduce airspeed by using the flaps. This is particularly useful if you are too high on a landing approach. Flaps also decrease stall speed during approach and landing.

Practice glides and descents.

Landing

Correct and safe landing is the most challenging part of flying. In essence, to land you fly a foot or two above the runway, then slow down until the plane stalls and stops flying.

Descend until you can see the runway. Every active runway has a number at each end. The line down the center of the runway is your guide for touchdown.

When you have spotted the runway, align yourself with it and fly toward it at approximately 70 knots. Your approach glide should be a steep one. The throttle should be cut and the elevators raised to maintain a 70-knot approach. An engine failure during a steep glide will have little effect on where you land. However, an engine failure during a long, shallow *power glide* could make you land short of the runway.

You must make a transition to straight and level flight when you are approximately 50 feet above the runway, so that you will be in straight and level flight a foot or two above the runway. This procedure is called the *flare*.

If you didn't raise your landing gear after takeoff, it is already lowered. Otherwise, lower it by pressing the Landing Gear key (G).

Your airspeed will start to drop as the plane loses momentum. As the plane slows, the nose will drop. Raise the elevators to keep the plane a foot or two above the ground. As you do so, the nose will rise. On touchdown, your elevators will be nearly all the way up.

Make sure your rudder is straight before you touch down. The rudder pedals and the rudder control ground steering. You will be whipped off the runway if your wheels are not straight as you touch down. An abrupt turn of the plane on the ground (a ground loop) can severely damage a real aircraft.

When your speed is reduced enough so that the plane can no longer fly, it will stall and touch down on the runway. If you "fly the plane onto the ground" above stall speed, it may bounce.

As you touch down, you will hear a sound and see the scenery on the display level off. Use the Brakes key (.) to *bleed off* speed, guiding the plane with the rudder. Continue to apply the brakes until you come to a complete stop.

You have successfully completed your first flight. To practice the fundamentals of flying before attempting advanced flight techniques, taxi to the end of the runway and prepare for takeoff. Don't forget to perform the pre-takeoff check as discussed earlier in this chapter.

Refueling and Servicing

All of the airports (except for the small, single-runway grass strips) have fuel and servicing facilities. These areas are marked by rectangles and are located at the ramp areas. (Each rectangle has an "F" inside it.) To refuel and have your aircraft serviced, come to a complete stop inside one of these rectangles. Both refueling and repairs occur instantaneously.

4 Flying the Business Jet

The business jet simulation is not as realistic as the single-engine prop aircraft simulation, but it is lots of fun. You can go places and view scenery very quickly. This mode allows you to fly at altitudes up to 45,000 feet and at speeds up to 445 knots (Mach .82).

Learjet Flight Characteristics

The performance characteristics of this simulation closely match those of a Gates Learjet 25G twin turbojet aircraft. For more information, see Appendix A, "Performance Specs." The major lack of realism in this simulation is with flight instruments and controls.

Instruments for the Learjet

A Learjet has two engines and thus two sets of engine instruments. Because they are turbojet engines, their instruments are different from those of a piston engine. Flight Simulator uses the single-engine prop's engine instruments instead of the Learjet's two sets of turbine speed, turbine temperature, and oil temperature gauges.

The *tachometer* is recalibrated to show percent of full RPM rather than absolute RPM.

The airspeed indicator is recalibrated to read speeds of up to Mach 1 (the speed of sound, 740 mph at sea level). The airspeed indicator reads out the true speed rather than traditional, or indicated, airspeed based on airflow. Indicated airspeed corresponds fairly well to *true airspeed* on slow aircraft. Because of low air density, a jet at 45,000 feet traveling near the speed of sound has an indicated airspeed that is usually just a few hundred knots. The true airspeed indicator gives a better indication of how fast you are really moving.

The rest of the instruments for the Learjet simulation are the same as those for the single-engine prop aircraft simulation.

Controls for the Learjet

The controls for the Learjet are basically the same as on the single-engine prop aircraft. The engines respond more slowly to throttle input because the jet engines need time to "spool" up (come up) to speed.

The aileron and rudder sensitivity is a bit higher, and the aileron can sometimes "get away" from you if the plane gets out of control. If the aileron indicator moves wildly with no keyboard or mouse control, the plane is out of control.

Flight Techniques

There are three things to remember when flying the business jet: fly it with a light touch (slow, steady control movements), remember that your aircraft is heavy and has a lot of inertia, and, most importantly, don't exceed the Mach maximum operating speed (Mmo).

The Learjet 25G has a maximum takeoff weight of 16,300 pounds (as compared to the Cessna Turbo Skylane RG II's 3100 pounds). Once an aircraft this heavy is on a given course and speed, it takes a lot of effort to slow it down or change its direction of flight. This is particularly true on landings. The best way to land the aircraft is to reach the runway numbers with just the proper speed and *rate of sink*. If you come in too fast, you float above the runway as the plane bleeds off speed. If your rate of sink is too high, you hit the runway hard. Extra rotation as you near the runway won't help — it will just change the attitude you are in when you smash into the runway.

The Learjet is a streamlined plane, and its two General Electric CJ610-8A turbojets are powerful engines. The biggest problem you will run into in this plane is too much speed. Mach .82 is the Mach maximum operating speed. It is indicated on the airspeed indicator. If you exceed it, the overspeed warning system is activated and sounds a warning buzzer. If you don't take action and reduce power, climb, or use spoilers (flap controls) to get the speed down, the "stick puller" pulls up the nose a bit to slow the plane down.

The overspeed dangers can not be overemphasized. This plane is so powerful that you can easily exceed Mmo in level flight with full throttle. If you let the plane get too much over Mmo, supersonic shock waves travel back on the wings until they reach the ailerons. Since the aircraft uses mechanical linkage controls, the yoke (as shown by the aileron indicator) begins to buzz and snatch wildly from side to side. At this stage you are out of control.

Once you are overspeed and out of control, don't be tempted to activate the spoilers (flaps on the simulator) to slow down. They will just drop the nose and make you go faster, putting you in a worse situation. Recover by pulling the power off and gently pulling back on the yoke. Too much yoke pressure will increase the wing loading, moving the shock wave back and making the controls shake even more violently. If all else fails, lower the landing gear. The Learjet is able to withstand the forces of gear down at high speed with only minor gear-door damage. The gear adds drag and helps stabilize the plane. It should slow you enough to regain control, so you can fly back to the airport to have your plane inspected and repaired if necessary.

Flight Simulator Configuration and Navigation

5 Mode Menu — Modes, Libraries, and Flight Recording . . . 59
6 Enviro Menu — Setting Environmental Factors . . . 67
7 Sim Menu — Setting Simulation Control Factors . . . 71
8 NAV/COM Menu — Traveling Through Flight Simulator's World . . . 75

Flight Simulator Configuration and Navigation

Now that you have taken your first few flights, you are ready for information about more advanced flying techniques and navigation. Use this part of the manual to learn how to create ever more challenging situations, and about flying around in Flight Simulator's world.

Chapter 5, "Mode Menu — Modes, Libraries, and Flight Recording," describes the six operational modes on the Mode menu, explains the Aircraft and Mode Libraries and how to create your own modes, and tells how to use the instant replay and demo system to record your own demos.

Chapter 6, "Enviro Menu — Setting Environmental Factors," explains about using the Enviro menu to set factors that are external to your aircraft, such as time, seasons, winds, and clouds.

Chapter 7, "Sim Menu — Setting Simulation Control Factors," describes the Sim menu, which controls factors internal to your aircraft, such as realism, reliability, and sound.

Chapter 8, "NAV/COM Menu — Traveling Through Flight Simulator's World," describes how to get around in Flight Simulator's "world." You learn about the map display and how the world is organized. You also learn about the autopilot feature, which is a navigational tool that pilots find invaluable.

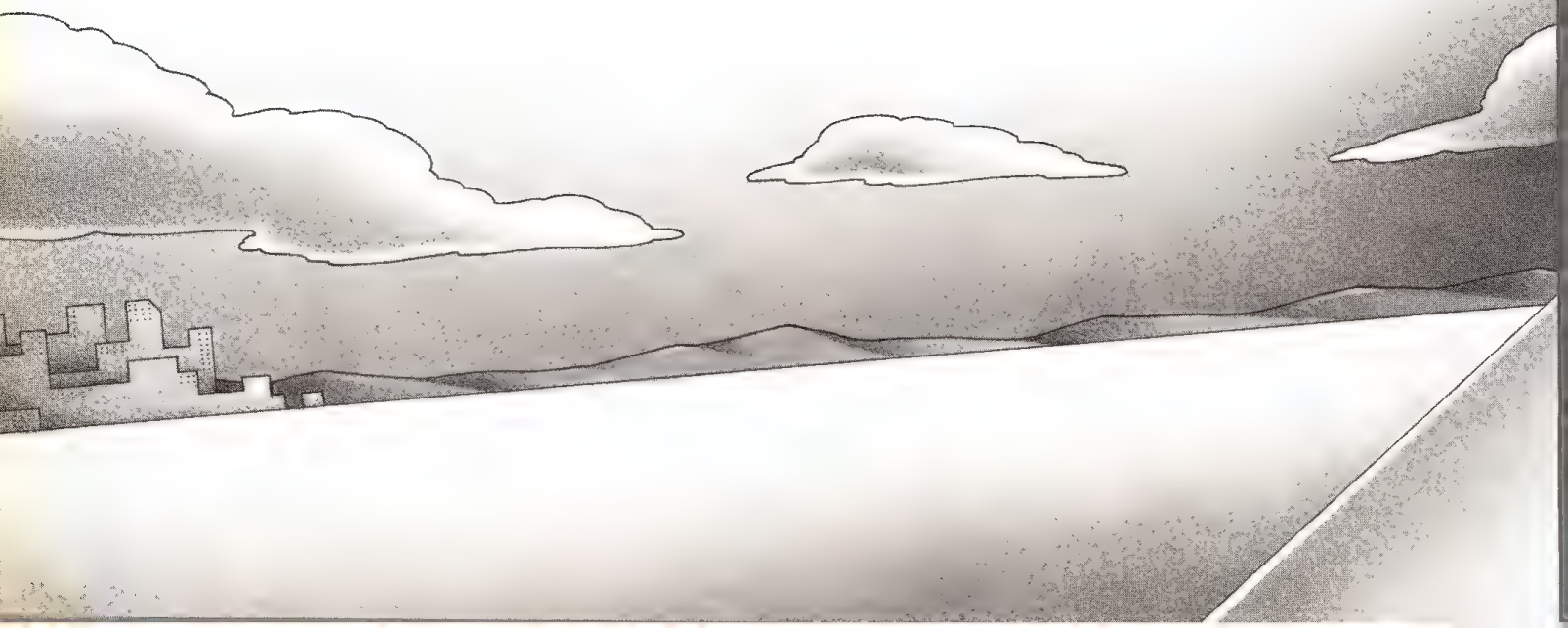

5 Mode Menu—Modes, Libraries, and Flight Recording

The Mode menu includes six operational modes, plus the Aircraft Library, Mode Library, Demo recorder, and EFIS/CFPD display. The following table shows the Mode menu commands. Options 1 through 6 are the operational modes.

Menu option	Used to
1 Normal Flight	Fly around, observe scenery, navigate using navigational aids. You start flight at Meigs Field in Chicago, or record your own startup position to use when Normal Flight is selected.
2 Flight Analysis	Choose landing analysis, course plotting, or maneuver analysis (Chapter 15).
3 Flight Instruction	Select prerecorded flight lessons. Let the instructor show you simple, difficult, and aerobatic maneuvers, or you fly the lessons, with the instructor guiding you (Chapters 11, 12, and 13).
4 Review Logbook	See, edit logbook entries, turn logbook on and off (Chapter 9).
5 Entertainment	Select interesting and fun flight scenarios: multi-player flight (fly with another plane), formation flying (follow another plane through obstacles and maneuvers), World War I Ace (aerial dogfight game), and crop dusting (spray a field) (Chapters 17, 18, and 19).
6 Demo	Run a demo showing Flight Simulator's capabilities, or record your own demo to use when Demo is activated (Chapter 5).
7 Quit	Quit Flight Simulator and return to DOS.
A Plane	Select the plane: Cessna or Learjet (Chapter 5).
B Mode	Select the flight mode (Chapter 5).
C Reset mode	Return to the startup mode.
D Create mode	Create your own startup mode (Chapter 5).
E Aircraft Library	View performance and design information about the aircraft (Chapter 5).
F Mode Library	View all flight modes (Chapter 5).
G Instant Replay	Review your last few moments of flight (Chapter 5).
H Demo Recorder	Record and play back demos (Chapter 5).
I EFIS/CFPD Display	Project a flight path on your window (Chapter 16).

Aircraft and Flight Mode Libraries

Flight Simulator stores aircraft type and flight mode information on disk in aircraft and mode files.

Each aircraft file contains information about:

- Aircraft performance
- Aircraft control panel design
- Aircraft external design
- Aircraft controls

A mode is a set of information that defines where a plane should be at the beginning of a flight. Each flight mode file contains information about:

- Aircraft location, orientation, and altitude
- Season and time of day
- Aircraft control settings
- Type of aircraft
- Cloud information
- Wind information
- Radio settings (NAV, COM, ADF)
- Reliability factor
- Realism
- Keyboard, mouse, and joystick sensitivities

The number of aircraft and flight modes is limited only by disk size. You can create your own flight modes, but your disk must not be write-protected, so that the mode can be stored on disk. You can't create modes on a write-protected disk.

Aircraft Library

Flight Simulator comes with two aircraft in its library: a Cessna Turbo Skylane RGII and a Gates Learjet 25G.

Selecting an Aircraft

1. Select Mode from the Menu bar.
2. Look at option A, Plane. This shows the current aircraft type.
3. Select option A repeatedly to cycle through the available planes in the Aircraft Library.
4. When you see the one you want, leave it on the menu. The new plane will be loaded when you exit the menu.

Specification Report

For more details about the planes you are flying, and to get a catalog listing of current aircraft, use the Aircraft Library menu.

1. Select Aircraft Library from the Mode menu.
2. Options 1 through 5 show planes in the library. Select a new plane by selecting the appropriate option. Select option 6 to see more aircraft (if any) available in the library.
3. Select option 7 to produce an aircraft specification report. This report gives valuable information about the plane.
4. Press ESCAPE to exit from the Aircraft Library or Specification Report menu.

Mode Library

Flight Simulator comes with several flight modes in its Mode Library. A mode is a set of information that defines where a plane should be at the beginning of a flight. These modes are interesting flight situations you may wish to try.

Selecting a Flight Mode

1. Select Mode from the menu bar.
2. Look at option B, Mode. This shows the current flight mode.
3. Select option B repeatedly to cycle through the available modes in the Mode Library.
4. When you see the one you want, leave it on the menu. The new mode will be loaded when you exit the menu.

Resetting a Flight Mode

A mode defines only where a plane should be at the beginning of a flight. Once you start flying, you are on your own. To return to the beginning of the flight mode, select option C, Reset mode, on the Mode menu. This puts you back to the beginning of the flight.

You can also reset the mode from the keyboard by pressing the PRINT SCREEN key.

Saving a Flight Mode

1. Get the plane to the location and in the configuration you want. Use Pause, if necessary, to freeze the position. A landing approach or sitting on the ramp at a favorite airport may make good flight modes.
2. Press the semicolon (;) key or select option D, Create mode, from the Mode menu.
3. Follow the instructions on the screen to type a mode title and DOS filename.
4. Choose option 3 to save the mode to disk; choose option N if you don't want to save the mode.

The mode will be written to disk (be sure your disk is not write-protected). The mode will now appear in the Mode Library, with the name you have given it.

Flight Mode Report

For more details about a flight mode, and to get a catalog listing of current modes, use the Mode Library menu.

1. Select Mode Library from the Mode menu.
2. Options 1 through 6 show modes in the library. Select a new mode by selecting the appropriate option. Select option 7 to see more modes (if any) available in the library.
3. Select option 8 to produce a mode report that gives details about the mode.
4. Select option 9 to delete the selected mode; select option A to rename the selected mode. These options are useful for Mode Library maintenance.
5. Press ESCAPE to exit from the Mode Library or Report menu.

Mode Control Sensitivities

When you save a flight mode, joystick, mouse, and keyboard sensitivities are saved with it. When you restore a mode, the sensitivities are set to the saved values. You may not want these sensitivities, particularly if you have sensitivity values with which you like to fly.

Select option B, Use mode control sensitivities, on the Mode Library menu to turn sensitivity loading on and off. When off (no plus mark), sensitivities are not changed when you load a mode.

Reading Version 2 Mode Files

You can load mode files from an earlier version (version 2.00 or higher) of Flight Simulator.

1. Put the disk containing the modes into drive A:.
2. Select option C, Load version 2 mode file from A:. All 20 user modes will be read and written to disk as files old10, old11, and so on.
3. Use option A, Change Selected mode name, on the Mode Library menu to rename the modes.

Changing Startup Mode

You can change the flight mode that Flight Simulator uses when it starts.

1. Select the mode you want from the Mode Library menu.
2. Select option D, Save startup mode to disk. The next time the simulator is started, the new mode will be used.

Flight Recording

Flight Simulator can record and play back demonstration flights (demos). One demo flight comes with Flight Simulator, and you can create and record your own demos. The instant replay feature also records your flight, making the last few moments of flight available for your review.

Instant Replay

As you fly, your position is constantly recorded. Flight Simulator has an instant replay feature that lets you look at your previous few moments of flight.

Viewing an Instant deplay

1. Pause the simulation.
2. Choose option G, Instant Replay, from the Mode menu. The Instant Replay menu tells you how many seconds of information are available.
3. The number of seconds to replay appears as menu option 1. If the replay time is what you want, press ESCAPE to run the replay. If you want to change the replay time, select option 1, type the number of seconds you want to see, and then press ENTER.
4. When you are ready to resume normal flight, press ESCAPE to exit the Instant Replay menu, and then press Pause to start the simulation.

Menu option 2, Auto Loop, can be set to provide a continuously running replay. Press ESCAPE to break out of the loop.

Menu option 3, Replay Speed in %, can be set from 20% (slow) to 255% (fast) of the normal playback rate. Type the percentage to indicate the replay speed.

Demo Recorder

Flight Simulator contains a Demo Recorder/Player, which is used whenever you select Demo from the Mode menu. This system interprets a series of recorded keypresses from a previous flight and sends them to Flight Simulator. The simulator then flies the same way it did when the demo was initially recorded.

Playing Demos

1. Select option H, Demo Recorder, from the Mode menu.
2. Options 1 through 5 show the currently available demo files. Select option 6 to see more demo files (if any).
3. Select the demo that you want to see (option 1 through 5).
4. When you exit the menu, the demo begins.

Recording Demos

You can make your own demos using the Demo Recorder.

Note The Demo Recorder records keypresses only, not joystick or mouse movements. You can not record demos using a mouse or joystick.

1. Set up the beginning point of the demo by placing the aircraft where you want it, with the appropriate beginning conditions.
2. Select option 7, Begin demo recording, from the Demo Recorder menu.
3. Exit into flight mode (press ESCAPE or SPACEBAR), and fly the demo.
   Remember, only keypresses are recorded, not mouse or joystick movements.
4. When the demo flight is over, end the demo by pressing the backslash (\) key, or selecting Demo Recorder, and then option 8, Stop demo recording.

The demo is now recorded. You will be asked if you want to see the demo. Answer yes or no. Then you will be asked if you want to save the demo to disk. Answer yes or no. If you choose Y, type a filename at the prompt.

Demo Options

Option 9, Delete demo, and option A, Change demo name, on the Demo Recorder menu let you delete old demo files or change their names.

Option B, Demo loop, is another playback option. When turned on, the demo cycles over again when it is finished. When turned off, "Demo Finished" appears when the demo is over, and the simulator pauses. Press P to resume normal flight after a demo is finished.

Creating Your Own Startup Demo

1. Select the demo you want Flight Simulator to use as the startup demo.
2. Select option C, Save startup demo.

6 Enviro Menu—Setting Environmental Factors

With Flight Simulator, you can change environmental flight factors that are external to the aircraft, such as seasons, time of day, clouds, wind, and turbulence. Set or change these factors through the commands on the Enviro menu.

Menu option	Used to
1 Season	Select winter, spring, summer, or fall.
2 Stars	Turn stars on and off at night.
A Time Set	Set the clock.
B Clouds	Set two levels of clouds, and set thunderstorms.
C Winds	Set surface winds and three levels of winds aloft.

Season

Winter, Spring, Summer, or Fall can be selected to specify the season. Select Season on the Enviro menu to advance to the next season.

Each season presents unique flying problems. Winter brings icy runways and startup problems. Summer brings hot, humid days that increase *density altitude* and reduce lift. Each situation requires different skills.

Stars

Select option 2, Stars, to turn stars on or off for night display. The stars are realistic and show true constellations with three magnitude levels.

Time of Day

Flight Simulator automatically sets the visual flight conditions to correspond to the time of day (as it appears on the clock). The clock records time in 24-hour format.

Flight Simulator simulates typical visual conditions for these four times of day: dawn, day, dusk, and night. Since the visual conditions for dawn and dusk are identical (though reversed), choosing either presents the same flight conditions.

The transition from one flight condition to another varies from season to season, as follows:

Season	Dawn	Day	Dusk	Night
Winter	7:00	7:30	17:00	17:30
Spring	6:00	6:30	19:00	19:30
Summer	5:00	5:30	21:00	21:30
Fall	6:00	6:30	19:00	19:30

The transition times are identical for all parts of the world.

Change the time on the clock by selecting option A, Time Set, on the Enviro menu. Use the options on the Time Set menu to advance or decrease hours and minutes, and set seconds to zero.

Remember to use 24-hour format when setting a time after 12 noon.

The clock can also be adjusted using the mouse. Point at the digit to be changed (hours, minutes, or seconds) and click the left button. Clicking the left side of the hours or minutes digits decrements the time, and clicking the right side increments the time. Clicking the seconds digit sets the seconds to zero.

Clouds

Choose option B, Clouds, from the Enviro menu to activate the Clouds menu for cloud adjustment.

You can set two levels of clouds, a top level and a bottom level. For each cloud level, select Tops to type the altitude of the top of the clouds, and select Base to type the altitude of the base (bottom) of the clouds. Cloud layer altitudes are measured in feet above sea level (MSL), not feet above ground level. Turn a cloud layer off by setting its top and base to zero.

When typing altitudes, use the BACKSPACE key to correct any errors. Press ENTER when the number is correct.

The option Cover refers to the degree of cloud cover. Choose this option to cycle through Clear, Scattered, Broken, or Overcast (1/8, 2/8, and so on, in Europe).

The option Deviation refers to a random number that is added to the cloud height. Breaking out of clouds at exactly 6000 feet is unrealistic. Adding a random factor, whose maximum value (positive or negative) is the value specified in this option, adds realism.

Thunderstorms

Flight Simulator can simulate thunderstorms — the weather phenomenon that pilots try hardest to avoid. The Clouds menu lets you specify the tops and base of the thunderstorm. Tops typically range from 25,000 to 50,000 feet. The Base altitude should be from a few thousand to about 15,000 feet.

Thunderstorm intensity is increased based on how big you make the storms (distance from base to tops), plus a random factor.

Select Coverage to specify the number of thunderstorms. Coverage cycles through Widely scattered, Scattered, and Dense.

Thunderstorms can be made to move. Select Movement direction to specify a direction in degrees; select Movement speed to specify the speed. Typical speeds are 5 to 30 knots.

Surface Winds and Winds Aloft

Choose option C, Winds, from the Enviro menu to activate the Winds menu. You can set surface wind, plus three levels of winds aloft.

To enter digits in the Winds menu, select the desired option, type the value, then press the ENTER key.

Simulate realistic takeoff conditions by setting surface wind speed, direction, and depth. Surface winds are encountered from ground level up to the altitude above ground level specified in Depth. Surface wind direction is specified as magnetic direction.

The top three wind levels (1, 2, and 3) are winds aloft. Their altitude is measured in feet above sea level (MSL) and their direction is true (relative to true north, not magnetic north).

Turbulence

The Turb options on the Winds menu can be set to simulate turbulent air conditions. Turbulence has a range of zero to ten. Zero indicates smooth air; ten is the most severe turbulence setting. Type the value for the degree of turbulence you want.

7 Sim Menu—Setting Simulation Control Factors

Controlling simulation entails setting or changing flight factors that are internal to your aircraft and the Flight Simulator system. These factors include realism adjustments, reliability, pause, and other internal effects. The following table summarizes the commands on the Sim menu, used to adjust simulation factors:

Menu option	Used to
1 Ground Texture:	Add texture to the ground.
2 Crash:	Turn crash detection and analysis on and off.
3 Sound	Turn sound on and off.
4 Pause	Pause and restart the simulator.
5 Auto Coordination	Link/unlink the ailerons and rudder.
6 Smoke System	Turn the smoke/spray system on and off.
7 Control Position Indicator	Turn on and off a window showing the position of the elevator, throttle, and aileron.
A Realism	Turn on and off several realism effects, and specify flight control level (from easy to realistic).
B Reliability	Set a reliability level, from 100% (totally reliable) to 0 (frequent problems).
C Control Panel Instruments	Turn off certain instruments to practice flying without them.
D Mouse	Set mouse sensitivity.
E Joystick	Set joystick sensitivity.
F Keyboard sensitivity	Set keyboard sensitivity.

Sound

Choose option 3, Sound, to turn all sound on or off. A plus beside Sound indicates it is on. The Q key can also be used to turn sound on and off.

Pause

Choose option 4, Pause, to stop the simulation. A plus beside Pause indicates that the simulation is stopped. The P key can also be used to pause, and is usually more convenient.

To continue the simulation, choose Pause again, or press P again.

Auto Coordination

Choose option 5, Auto Coordination, to link and unlink ailerons and rudder. A plus beside Auto Coordination means the rudder and ailerons are linked.

Flying in Uncoordinated Flight mode (no plus beside Auto Coordination) means that you must use the rudder pedals and ailerons to fly. This is a more difficult mode, but it allows you to perform maneuvers that are not possible in Auto-coordinated Flight mode. For more information on performing these maneuvers, see "Lesson 4. Uncoordinated Flight" in Chapter 12, "Advanced Flight Training."

Smoke System

A smoke system that emits puffs of white smoke is installed in the aircraft. Choose option 6, Smoke System, on the Sim menu, or press the I key to toggle the system on and off. You can see the smoke from Tower view, or streaming out behind you in Cockpit view.

Control Position Indicator

The control position indicator is a small window that shows the position of the flight controls (elevator, throttle, and aileron). A square moves left and right from window center to show aileron movement, and up and down to show elevator position. Position arrows on the left and bottom show throttle and rudder position.

Select option 7, Control Position Indicator, on the Sim menu to turn this window on and off.

This window can be moved wherever you want it. For more information, see "Moving and Sizing Windows" in Chapter 2, "Aircraft Controls."

Ground Texture

Ground texture (randomly placed patterns on the ground that give a feeling of depth) can be added to the 3-D display. The Ground Texture option on the Sim menu cycles through Off, Dots, Small Rectangles, and Big Rectangles. Choose the one that gives the texture you want.

Crash Detection and Analysis

There are three settings for crash detection on the Sim menu: Off, Detect, and Detect and Analyze. If Crash is turned off, the plane "bounces" when it hits the ground.

In Detect mode, the plane will crash, you will get a crash message, and the simulator will reset.

In Detect and Analyze mode, a graph showing flight trajectory, vertical velocity, and other information appears after a crash. Use this graph to determine what went wrong in the flight, and how to correct it. Press ESCAPE to erase the graph and reset the simulator.

Reliability

When you select Reliability, you can choose a reliability level between 0 and 100%. The value represents the probability of the plane running reliably. A value of 100 ensures a totally reliable aircraft, while a value of 0 means you'll encounter frequent problems (instrument failures, engine problems, fuel system problems, and so on). The pointer below the line shows the current reliability setting. To change the setting, press the number (one through nine) representing the reliability you want, where one is the least reliable and nine is the most reliable.

Realism

The Realism menu is used to control realism effects. At the top of the menu is a scale showing the Flight Control level, which you can set from Easy (1) to Realistic (9). The rest of the menu lists realism effects. Turn on and off the effects you desire by pressing the option letter on the keyboard, or clicking the item with the mouse. Turning on these reality effects adds more complexity to the simulation and makes it harder to fly.

Engine If this is on, you must use the magneto switch to start the airplane.

Elev Trim This activates the elevator trim control and causes the elevator position to drift toward a setting that is determined by the aerodynamic conditions and the elevator trim setting. When this effect is on, you have to adjust the elevators constantly unless you trim the plane properly.

Gyro Drift and Barometer Drift If either of these is on, the instrument drifts as time goes by. You should get into the habit of occasionally adjusting these instruments while in flight.

Light Burn If this is on, lights occasionally burn out. Flying with your lights on during the day can cause them to burn out.

Fast Throttle If this is on, the engine may bog down and die if you increase your throttle too quickly.

Instrument Lights If this is on, your panel is blank at night unless you turn your lights on.

Partial Panel

Selecting option C, Control Panel Instruments, presents a menu of the flight instruments. Those instruments you select are blanked, forcing you to fly with limited instrumentation. This is called flying "partial panel." It is good flight training to fly without key instruments and by visual references only. You get an idea of what to expect if you have an instrument failure.

There are a few "AUX" gauges in the menu. These are for future installable gauges and aren't used in the baseline Flight Simulator.

Keyboard Sensitivity

Selecting this option presents a menu containing sensitivity controls for aileron, elevator, and rudder sensitivity. For information about controlling mouse or joystick sensitivity, see Appendix B, "Using a Mouse or Joysticks."

8 NAV/COM Menu—Traveling Through Flight Simulator's World

This chapter describes Flight Simulator's "world" and how to get around in it. First, you learn about the map display, a vital tool in navigation. Then you learn how the world is organized and how to move quickly around it without flying. Navigational aids, including VOR, ADF, and ILS radio aids are summarized. Finally, the autopilot, a valuable navigational tool, is covered.

Navigation commands in the NAV/COM menu are summarized below:

Menu option	Used to
1 Scenery:	Select scenery on hard disk or floppy disk.
2 Scenery load	Load a scenery disk.
3 Map display	Turn map display on and off.
4 Map zoom in	Zoom in the map display.
5 Map zoom out	Zoom out the map display.
6 Autopilot	Turn on and off the autopilot.
7 Air traffic control communications	Enable messages from the tower to be sent to your plane.
8 EFIS/CFPD visuals	Select the CFPD approach.
9 Slew	Turn slew mode on and off.
A Position set	Enter coordinates for your destination position.
B NAV radio	Adjust the navigation radios.
C COM radio	Adjust the communication radio.
D Transponder	Adjust the transponder.
E ADF	Adjust the automatic direction finder.
F Autopilot set	Turn on and enter autopilot information.

Map Display Options and Controls

Choose option 3, Map display, from the NAV/COM menu or press NUM LOCK to see a map of the area over which you are flying. A plus in front of Map display on the menu indicates the map display is on. Press NUM LOCK twice rapidly, or select Map display on the NAV/COM menu, to turn off the map display.

You can zoom in on the map to look closely at airports (when taxiing), or zoom out to look at large areas to see where you are. Press NUM LOCK, then the +, −, or BACKSPACE key to zoom in, zoom out, or return to the 1X view display. You can also choose Map zoom in or Map zoom out from the NAV/COM menu for zoom control, but using the keyboard is easier.

Moving Around in the World

The Flight Simulator world spans more than 100 million square miles, encompassing the continental United States and extending into Canada, Mexico, and the Caribbean. A second coordinate system allows the world to extend into Europe and Southeast Asia. The center coordinate (x = 0, y = 0) of the Flight Simulator world is 40 degrees north latitude and 88 degrees 30 minutes west/east longitude, about 30 miles southwest of Champaign, Illinois.

The world database includes 118 airports in five general areas: New York/Boston, Central and Northern Illinois, Seattle, Los Angeles, and San Francisco. Charts 1 through 5, included with this manual, are aerial charts of these areas. These charts, although highly accurate, are for use with Flight Simulator only.

You can fly beyond the database areas — into Canada, for example. However, only the five areas mapped in the charts included with this manual are populated with airports and other ground reference points.

Because Flight Simulator is a real-time simulator, flying between distant points (such as Seattle and Los Angeles) takes hours. The single-engine aircraft's fuel tank holds 88 gallons of fuel, enough to take you, under most conditions, approximately 1500 miles from your point of origin. There are no refueling stations outside the populated world, so the distance you can fly is limited. The business jet's fuel tank holds approximately 6000 pounds of fuel, so it is capable of cross-country and transatlantic flights.

You can move from one distant area to another without flying by using one of two methods: slewing, or setting destination coordinates using Position Set, both available in the NAV/COM menu.

Slewing

Slewing lets you move very slowly or very rapidly (faster than you could fly) from one point to another, viewing the scenery along the way.

To enter Slew mode, choose Slew from the NAV/COM menu. Your previous north and east coordinates will be displayed at the top of your screen. Scenery appears out the windshield as if you were in normal flight mode.

Figure 8.1 shows keys, mouse actions, and joystick movements that control slew directions. There are two controls for altitude and pitch.

Keyboard

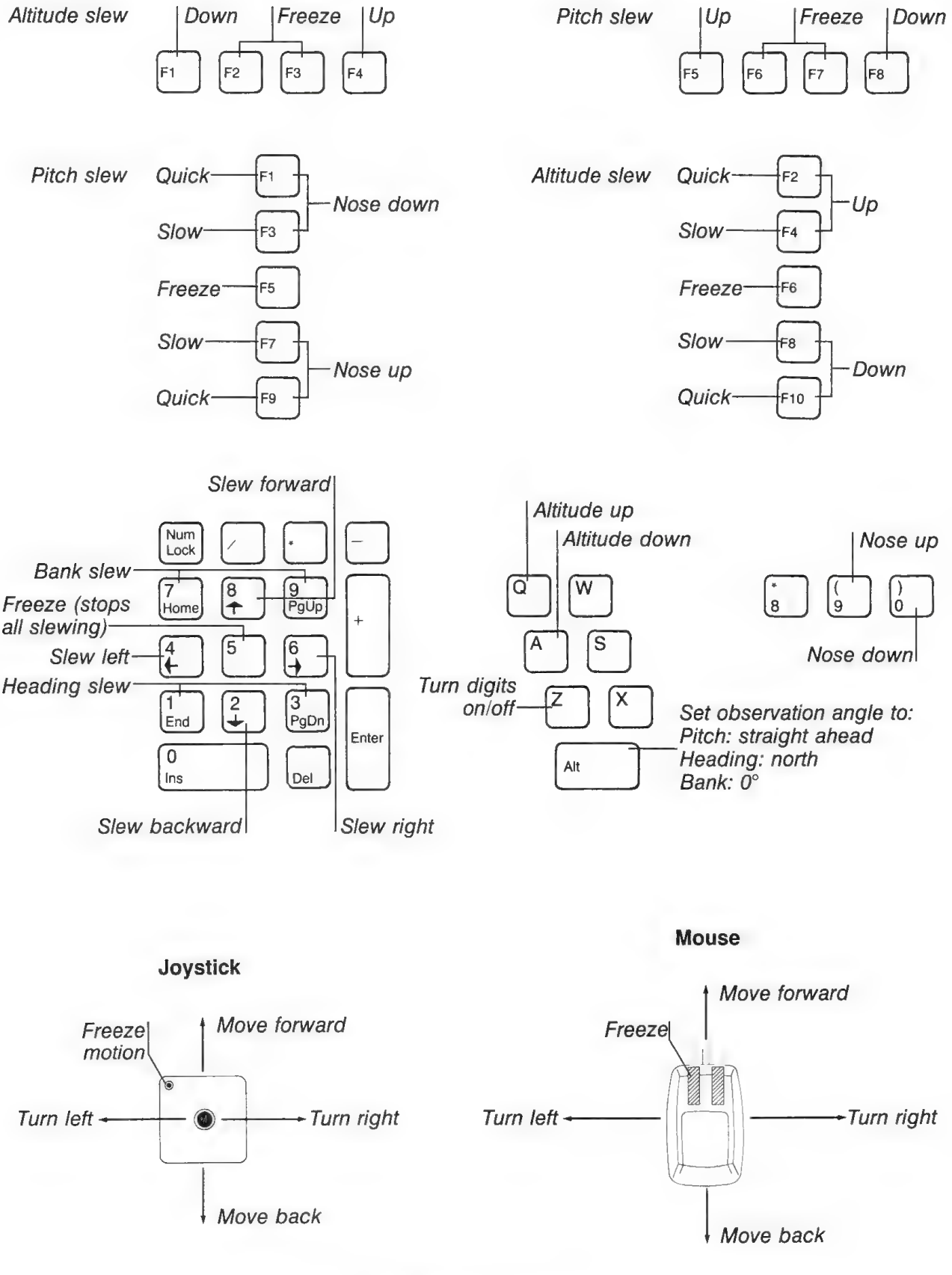

Joystick

Mouse

8.1 Slew Controls

As you slew around, the values next to the north and east parameters change to reflect your new position.

Exit the slew system by selecting Slew on the NAV/COM menu to toggle the system off (no plus mark). You resume flight from the new north and east positions.

Setting Coordinates

The faster way to move from one area to another is to set the destination coordinates. Choose option A, Position Set, from the NAV/COM menu. The Position Set menu appears and you can enter the north, east, and altitude coordinates of your destination airport, as well as the heading. You type values in the left column of numbers. The right column of numbers shows your original settings. Press ESCAPE to exit from the menu and to set the coordinates. Charts 1 through 5 show precise airport coordinates.

Flight Simulator puts you at your destination and selected altitude. Then continue flying or taxiing as you would in regular flight mode.

You can also place the control tower using the Position Set menu.

Radio Navigational Aids Summary

Flight Simulator features five of the most commonly used navigational aids: VOR (Very high frequency Omnidirectional Range), DME (*Distance Measuring Equipment*), ADF (Automatic Direction Finder), ILS (Instrument Landing System), and autopilot. These navigational aids are available for day or night flight. Airport beacons are provided at night. For more information about the techniques of using these instruments, see Chapter 14, "Navigation Course."

The following chart summarizes Flight Simulator's navigational aids. See Figure 1.1 for the position of the instruments on the control panel.

Instrument	Full Name	Function
NAV 1	Navigation Radio 1	Receives VOR stations and drives OBI 1.
NAV 2	Navigation Radio 2	Receives VOR stations and drives OBI 2.
OBI 1	Omni Bearing Indicator 1	Has VOR 1 tracking needle, ILS tracking needle, TO/FROM flag, and Glideslope needle.
OBI 2	Omni Bearing Indicator 2	Has VOR 2 tracking needle and TO/FROM flag.

Instrument	Full Name	Function
OMI	Outer, Middle, and Inner Marker Lights	Lights flash when in vicinity of an outer, middle, or inner marker beacon when making an ILS approach.
COM	Communication Radio	Receives ATIS, tower, and multi-player communications.
DME	Distance Measuring Equipment	Source-switchable between NAV 1 and NAV 2. Tells distance and speed toward VOR station, or other plane in multi-player mode.
ADF	Automatic Direction Finder	Takes the panel space of OBI 2 when activated. Tracks NDB beacons and other plane in multi-player mode.
XPNDR	Transponder	Transmits code to air traffic control.

Airport Beacons

You can spot airports at night by their flashing beacons. Beacons alternate between green and white. Locations of beacons are shown on the charts at the back of this manual.

Autopilot

On long cross-country flights, an autopilot is a good flight aid. It relieves a pilot of the tedious chore of holding a desired altitude and tracking a heading or VOR. This reduces fatigue and lets the pilot devote more time to other flight tasks such as instrument scan, radio communications, or approach preparation.

An autopilot's wing leveler (a separate system in many planes, but integrated with the autopilot in Flight Simulator) keeps the wings as level as possible to keep you from going into an undesired turn or roll. This is especially useful in turbulent conditions in clouds. If you don't keep an eye on the attitude indicator continuously (hard to do while preparing for an instrument approach), you can end up in a steep bank or upside down and not even realize it until you are in an emergency situation.

To set the autopilot, choose option F, Autopilot Set, from the NAV/COM menu. Use the mouse or keyboard to select option 1, Wing Leveler; 2, NAV 1 Lock; 3, Heading Lock; or 4, Altitude Lock. A plus beside an option indicates which autopilot locks are turned on. Any combination of locks can be on at the same time. Select options 1 through 4 again to turn locks off.

When you select Heading Lock or Altitude Lock, a cursor appears in the field to the right of the menu item. If the current setting (gyro compass direction or altitude) is correct, press ENTER. If not, type the value you want, and then press ENTER.

NAV 1 Lock tracks the VOR radial that you have set on the Omni-Bearing Selector. A good way to set up NAV 1 Lock is to track the VOR manually as described in "VOR Navigation" in Chapter 14, "Navigation Course." Then choose Autopilot from the NAV/COM menu and turn NAV 1 Lock on. The autopilot tracks the radial while you perform other flight tasks.

Once the autopilot is set, it starts tracking the locked functions. You can turn the autopilot on and off at any time by pressing Z; selecting option 6, Autopilot, from the NAV/COM menu; or selecting option 5, Master Autopilot on/off, from the Autopilot Set menu.

The Autopilot status indicator on the control panel indicates whether the autopilot is on or off. This indicator appears below the artificial horizon.

Flight controls for the locked functions (ailerons when the wing leveler is turned on, for example) will respond sluggishly as you fight the autopilot. If you need to regain full control for a while, press Z to turn the autopilot off temporarily.

Flight School

9 Logbook . . . 85
10 Ground School . . . 87
11 Basic Flight Training . . . 95
12 Advanced Flight Training . . . 103
13 Aerobatics Course . . . 109
14 Navigation Course . . . 121
15 Flight Analysis and Course Plotting . . . 129
16 EFIS/CFPD Display . . . 131

Flight School

Welcome to Flight Simulator Flight School. While you are here, you will learn the basics of flight. Those of you who don't wash out will go on to learn some of the finer points, such as aerobatics and navigation.

You veteran pilots who are just taking a tour through Flight School will be interested in the Logbook, and in Flight Analysis and Course Plotting — a few Flight Simulator features that can help you polish your skills or just keep track of your flights.

A quick visit to the Flight School research labs lets you fly a new system that the aviation community is working with — a Command Flight Path Display. Try it. We think you'll agree that this is the navigation tool of the future.

Chapter 9, "Logbook," gets you started keeping your logbook up to date.

Chapter 10, "Ground School," teaches you the basics of flight physics, attitude flying, and various rules of flight.

Chapter 11, "Basic Flight Training," takes you through basic flight techniques in ten flying lessons.

Chapter 12, "Advanced Flight Training," takes you through more advanced flight techniques and maneuvers.

Chapter 13, "Aerobatics Course," teaches common aerobatic maneuvers.

Chapter 14, "Navigation Course," presents topics in radio navigation using radio navigational aids.

Chapter 15, "Flight Analysis and Course Plotting," explains Flight Simulator's landing and maneuver analysis system, and the course plotting system.

Chapter 16, "EFIS/CFPD Display," tells how to fly with a system from aviation's future — a Command Flight Path Display. It's quite interesting and fun.

Good luck in Flight School!

9 Logbook

Pilots keep track of the hours they have flown by recording them in a Logbook or Pilot Log. Flight Simulator can maintain logbooks for any number of pilots.

Logbook Format

The logbook format is an abbreviated format derived from official pilot logbooks. These logbooks usually also include aircraft category (single engine, multi-engine), aircraft identification numbers, number of landings, and whether the landings are simulated or actual. Flight Simulator automatically determines if you are flying DAY, night (NGT), or on instruments (INST).

Flight Simulator's logbook entries look like this:

STANDARD PILOT LOG

DATE	AIRCRAFT MODEL	TO/FROM/ REMARKS	DAY	NGT	INST	TOTAL
12-15-87	Cessna turbo skylane rgII	Champaign to Bloomington Illinois	1.5	0.0	0.0	1.5
1-03-88	Gates Learjet 25G	Van Nuys to San Diego	0.0	1.0	0.0	1.0
TOTALS			1.5	1.0	0.0	2.5

The date of the flight is taken from your computer's time/date clock. Day or night logging is based on your flying time before and after sunset on Flight Simulator's instrument panel clock.

Making Logbook Entries

When you start Flight Simulator, you are asked if you want to enter this flight in the logbook. For more information about naming logbooks and logging a flight into the logbook, see "Answering the Startup Questions" in the introduction section, "Welcome."

Editing or Printing Your Logbook

The logbook is stored in a standard ASCII text file on disk. The filename is xxxxxxxx.log, where the eight x's represent the first eight characters of the name of the pilot's logbook (usually the pilot's first or last name).

You can edit the logbook using a text editor. Only edit the TO/FROM/REMARKS field. Always leave the number columns lined up, because the logbook system uses their positions to add up hours.

Print the logbook by sending the file to a printer using a standard DOS COPY command (for example, type *copy johnf.log com1*).

10 Ground School

When learning to fly, you must take to the books as much as you take to the sky. The *Flight Training Handbook*, published by the FAA (available for about ten dollars from Sporty's Pilot Shop, and other book suppliers) contains all the topics that must be covered. The handbook includes such topics as the basics of flight, engines and airplanes, controls and maneuvers, traffic patterns, taking off and landing, and emergency flight. These topics are just a starting point. You must also learn about aviation weather, radio navigation, instrument flying, and operating in controlled airspace and traffic areas, not to mention the Federal Aviation Regulations (FARs).

This chapter briefly covers a few of the important points that you might learn in your first day or two of ground school. All the information presented here is from real flight training material, so everything you learn also applies to real aircraft. When it comes to flying a real aircraft, however, there is no substitute for a flight course that covers all the above topics in depth and puts you through fifty or more hours of flight time with an instructor. This does not mean that Flight Simulator is just another entertaining computer program. If the past is any indication of the future, many of you new Flight Simulator pilots will go on to get your pilot's license from a certified flight school, and when you do, look back fondly at your old alma mater—Flight Simulator Flight School.

Flight Physics

Balance of Forces

There are four components that must be balanced when flying an airplane: thrust, drag, weight, and lift (see Figure 10.1).

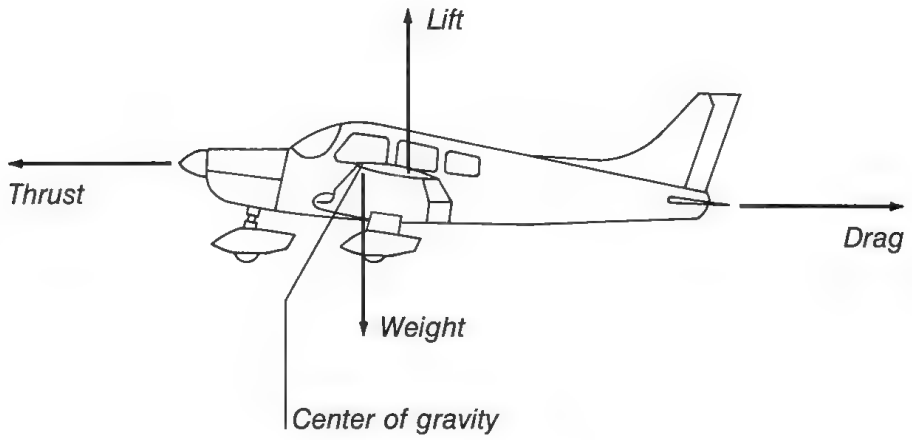

10.1 Balance of Forces

The four-force relationship is more complex than it first appears because the forces interact under the pilot's control. Here are a few points concerning force interaction:

Lift

Lift is influenced by two things: how fast you go, and your *angle of attack* to the oncoming air (generally how far you pitch up and raise the aircraft's nose).

The faster you go, the more lift you produce. The greater the angle of attack, introduced by pulling back on the control yoke, the more lift you produce.

You can only go so far on the angle of attack, however, before the wing "stalls," and you have no lift at all. This happens at an angle of attack between 9 and 20 degrees, depending on the airfoil (wing cross-section) design.

Drag

Drag is the resistance that pulls the plane back and balances out the thrust from the engine. Drag increases as your speed increases, proportionate to the square of the velocity. Basically, if you go twice as fast, you have four times as much drag.

Thrust

Thrust moves the plane forward through the air. It makes the plane go faster until drag is equal to thrust, and that's as fast as you can go.

Drag (counteracting force) increases proportionate to the square of the velocity. Horsepower is a measure of force over a distance during a defined period of time. When you double your speed, you square your drag (which takes four times as much horsepower to balance) and double your distance covered per time (which takes twice again as much horsepower). Basically, horsepower requirements go up as a function of velocity cubed. It takes eight times as much horsepower to go twice as fast.

Stability, Weight, and Balance

Most airplanes have two sets of wings — one set in front and a small set in back. Did you ever wonder why two sets are needed? Did you ever wonder why airplanes can't fly backwards? The answer lies in stability.

An airplane must fly straight and smooth through the air for its wings to work properly. This happens because of the *weathervane effect* — the tendency to pivot around a pivot point (the center of gravity on an airplane) until the airfoils are in back of the pivot point with relation to the oncoming wind (see Figure 10.2a). To make an airplane stable, you must put the wings (actually the wing's center of lift) behind the plane's center of gravity.

This also makes an aircraft want to *nose over* (see Figure 10.2b). To prevent this, a small "wing" can be added to the back of the plane to push the tail down and balance the forces. This wing, too, is behind the center of gravity so that it, too, acts in a positive, weathervane way (see Figure 10.2c).

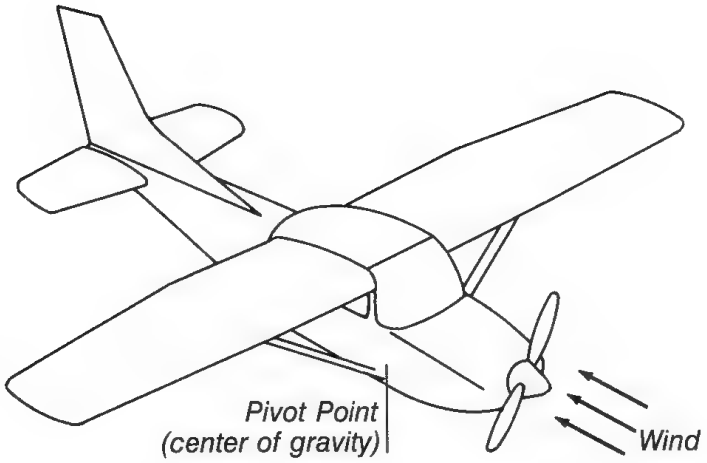

a) Wings behind center of gravity cause plane to weathervane into the wind and point forward, instead of flipping around and pointing backward.

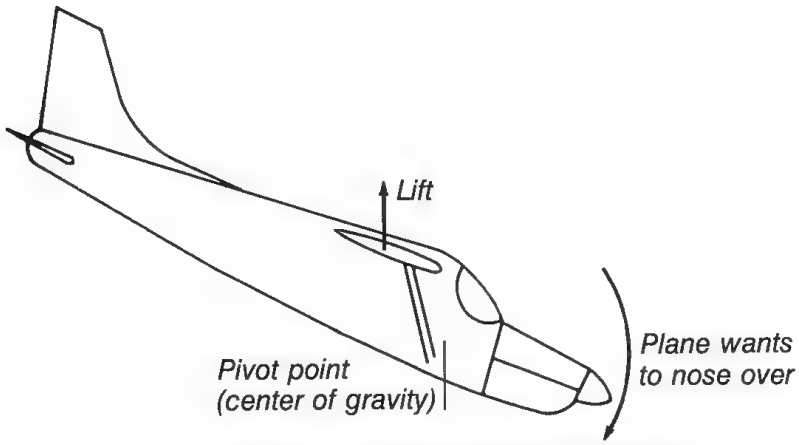

b) The plane's lift behind the center of gravity tends to make the plane nose over.

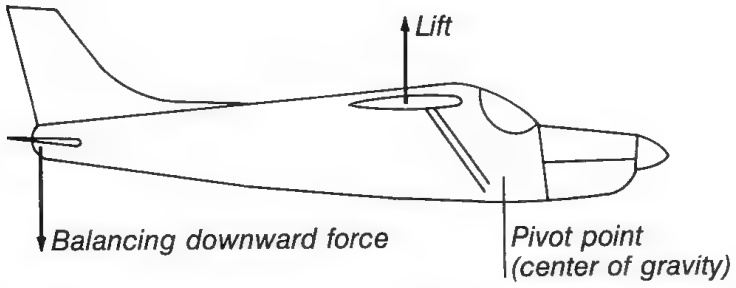

c) Small wing at the back pushes the tail down and balances the forces.

10.2 Aircraft Stability

There are two points to note here — one just interesting, and the other very important. The interesting point is that the front wing pushes up, and the rear one (horizontal stabilizer) pushes down. The important one is that when you go on a trip, especially a long cross-country one with a lot of baggage and friends, be careful how you load your aircraft. If you put too much weight in the rear and get the center of gravity behind your center of lift, your plane will no longer be stable and will want to weathervane around and fly backwards. You won't stay in the air too long.

For more information about aircraft loading, and weight and balance diagrams, see the "Aircraft Loading" and "Weight and Balance Diagram" sections in your airplane owner's manual and flight textbooks.

Attitude Flying

Pilots learn to fly using *attitude flying*. Attitude refers to the aircraft's orientation (notably pitch and bank) to the world around it.

Airplane control is composed of three components:

- Pitch control (see Figure 2.4), using elevators to raise or lower the nose in relation to the horizon.
- Bank or roll control (see Figure 2.2), using ailerons to control the desired bank angle in relation to the horizon.
- Power to establish or maintain desired airspeeds in coordination with attitude changes.

The following visual references are used for aircraft control:

- Airplane's nose (or axis indicator on Flight Simulator) shows pitch attitude and flight direction.
- Airplane's wingtips show pitch attitude and bank.
- Windshield shows angle of bank.

The following flight instruments (see Figure 1.1) are used as instrument references for aircraft control:

- Attitude Indicator shows pitch and bank.
- Heading Indicator shows direction of flight and need for a turn (and thus, need for a bank).

- Altimeter shows altitude and need for a change in altitude (and thus, need for a change in pitch).
- Vertical Speed Indicator shows rate of climb or descent.
- Airspeed Indicator shows the results of power or pitch changes through changes in the airspeed.

The basic flight lessons in Chapter 11, "Basic Flight Training," will help you learn the use of controls to attain the proper attitude in relation to the horizon, using inside and outside references, and the importance of checking all reference points.

Information Scan

With all the flight instruments and visual cues used in flying, it's good to develop a systematic way of scanning your instruments and visual "out-the-window" displays to make sure all important items are being looked at, at least once in a while.

For the visual flights we'll be taking, you should begin your scan out the front window, then follow this sequence:

1. Right window, then back to front window.
2. Left window, then back to front window.
3. Six primary instruments to view airspeed, altitude, and heading.
4. Back to the front window.

The visual scan out the windows lets you look for air traffic — something that is very important in today's crowded skies.

Occasionally when you perform step three (look down at the control panel), also look at the engine gauges (fuel, oil, tach, etc.). Every 30 seconds or so is often enough.

VFR and IFR Weather Restrictions

Before flying, you must make sure that you are complying with the visibility and instrument requirements for the area in which you are flying. These requirements are in the *Airman's Information Manual* and *Federal Aviation Regulations* (FAR) books. Make sure you have the latest version, because these restrictions are periodically updated.

In the lessons, we will be flying in *uncontrolled airspace* (the portion of airspace that has not been designated as Continental Control Area, Control Area, Control Zone, Terminal Control Area, or Transition Area). We will be flying under VFR (visual flight rule) conditions. FAR Part 91.105, concerning basic VFR weather minimums, includes the table below.

	Uncontrolled Airspace		Controlled Airspace	
Altitude	**Flight Visibility**	**Distance from Clouds**	****Flight Visibility**	****Distance from Clouds**
1200′ or less above the surface, regardless of MSL Altitude	*1 statute mile	Clear of clouds	3 statute miles	500′ below, 1000′ above, 2000′ horizontal
More than 1200′ above the surface, but less than 10,000′ MSL	1 statute mile	500′ below, 1000′ above, 2000′ horizontal	3 statute miles	500′ below, 1000′ above, 2000′ horizontal
More than 1200′ above the surface, and at or above 10,000′ MSL	5 statute miles	1000′ below, 1000′ above, 1 statute mile horizontal	5 statute miles	1000′ below, 1000′ above, 1 statute mile horizontal

*Helicopters may operate with less than 1 mile visibility, outside controlled airspace at 1200 feet or less above the surface, provided they are operated at a speed that allows the pilot adequate opportunity to see any air traffic or obstructions in time to avoid collisions.

**In addition, when operating within a control zone beneath a ceiling, the ceiling must not be less than 1000′. If the pilot intends to land or takeoff or enter a traffic pattern within a control zone, the ground visibility must be at least 3 miles at that airport. If ground visibility is not reported at the airport, 3 miles flight visibility is required. (FAR 91.105)

Flight Simulator's weather for the flight lessons meets all these minimums, so as long as you stay 500 feet below, 1000 feet above, and 2000 feet horizontally away from any clouds, you will be within VFR minimums.

Cruising Altitudes

If you're flying cross-country, or flying any non-maneuver situation, you should fly at designated flight levels. VFR air traffic going east (0 to 179 degrees magnetic) stays at odd thousands plus 500 feet (3500, 5500, 7500, for example), and traffic going west stays at even thousands plus 500 feet (4500, 6500, 8500, for example). IFR traffic goes even thousands east and odd thousands west (NOT plus 500 feet). FAR Part 91.109 and 91.121 outlines these altitudes and all the fine points and exceptions concerning them.

When the weather gets very bad, flying "on instruments" (IFR) is the only way to go. The restrictions are not nearly as severe, and flying through clouds is legal, but you must have an instrument flight rating. Flight filing and traffic control requirements are much more severe.

This completes today's ground school. The topics covered above give a good flavor of the topics you would cover in a real ground school course, and present a few of the items that pilots use the most in everyday flying. Now, it's time to take some flight lessons in Flight Simulator.

11 Basic Flight Training

The Flight Simulator flight lessons in this chapter lead you through common flight procedures and maneuvers. You can follow the computerized "instructor" as the maneuver is performed, or you can fly the maneuver yourself, with feedback from the instructor. These lessons should teach you enough to fly Flight Simulator quite effectively and familiarize you with the maneuvers performed in flying.

The explanations accompanying the lessons and giving information about the topics covered are excerpts from the *Flight Training Handbook* AC 61-21A, published by the U.S. Department of Transportation, FAA Flight Standards Service. The official handbook gives much more detail on the topics than is presented here (it's over 300 pages long), and you can get an even better understanding of these lessons by getting a copy. Excerpts from *Flight Physics and Aircraft Control with an Introduction to Aerobatics* by Moment and Emanual are also included. This book is recommended reading and available for $3.00 from Sublogic Corporation (201 West Springfield, Champaign, IL 61820).

To fly a lesson, first read the goal of the lesson. Then select the lesson from the Flight Instruction menu. Let the instructor fly the lesson, then fly it yourself.

Using the Flight Instruction Menu

The Flight Instruction menu lets you choose among flight lessons. Activate the menu by choosing Flight Instruction from the Mode menu on the menu bar.

The lessons available appear at the top of the menu. Choose option w to see more lessons. Activate a lesson by selecting the lesson, then select the Lesson Mode (Instructor control or Student control). Press ESCAPE to begin the lesson.

Instructor Control Mode

Selecting option x on the Flight Instruction menu toggles between Instructor control and Student control. In Instructor control mode, the instructor flies the selected lesson. The instructor's comments appear on the 3-D screen and highlight the important flight actions.

Student Control Mode

Selecting this mode puts you in control. You are positioned at the beginning of the lesson (up in the air or on the ground as appropriate). Then the instructor gives you the controls. Try flying the lesson as the instructor did in Instructor control mode. The instructor will make comments as you fly, giving you feedback on how you are doing.

It's important to note that the Student control mode analyzes your actions and gives feedback based on your actions. It does not blindly lead you through a series of mechanical motions that may or may not give you correct flight results.

Ground Operations

The first step before taking to the air is learning how to get around the airport on the ground. You should know about taxiing to the runway, waiting for clearance to takeoff, and positioning yourself for takeoff if given a "position-and-hold" clearance.

Lesson 1. Taxiing

This lesson teaches you to taxi. You will taxi down a taxiway and stop at the line before the runway. After receiving clearance, you will taxi into a "position-and-hold" configuration.

Basic Flight Maneuvers

The following lessons take you through the basic techniques of flying an aircraft.

Lesson 2. Attitude Flying

"Attitude Flying" in Chapter 10, "Ground School," explained the concept of attitude flying, using visual and instrument references to orient yourself correctly as you fly. This lesson takes you through a short flight as you watch the references and perform your information scan.

Lesson 3. Straight and Level

In straight and level flight, you maintain a constant heading and altitude.

Straight flight is achieved by holding a constant heading. Select two or more outside visual references (towns, roads, etc.) to form an imaginary line, and keep the plane pointed along the line. While flying the line, check the heading indicator to confirm that you are flying a straight course. Compensate for slight deviations from the straight course by making very shallow turns, using the aileron and rudder.

Level flight is achieved by holding a steady altitude, using pitch to compensate for altitude deviations, and power to control airspeed.

The pitch attitude for level flight (constant altitude) is obtained by selecting some portion of the airplane's nose (axis indicator in Flight Simulator) and keeping it fixed relative to the horizon. Look at the altimeter occasionally to confirm that you're holding constant altitude. If you are deviating, change pitch (yoke forward or back) to return to the desired altitude.

There are two points to remember about level flight:

- The pitch required to maintain a steady altitude varies with power setting, aircraft loading, and airspeed.
- Although the vertical speed indicator shows how fast you are climbing or descending, don't try to maintain level flight by zeroing this instrument. If you "chase" the gauge, the gauge's lag and the aircraft's momentum lag can cause the altitude to oscillate, turning straight and level flight into a roller coaster ride. Instead, use the altimeter to make slight corrections and establish a constant altitude trend. You will notice, when glancing at the vertical speed indicator, that it is hovering around zero.

Lesson 4. Turns

A turn is a basic flight maneuver used to change or return to the desired heading. It involves close coordination of all three flight controls — aileron, rudder, and elevator.

Turns are made by banking the wings. By changing the direction of the wing's lift toward one side or the other, the airplane is pulled in that direction. This is done by applying coordinated aileron and rudder pressure to bank the airplane in the direction of the turn.

Turns are divided into three classes:

- Shallow — bank angle less than 20 degrees, with inherent stability of the airplane acting to level the wings, unless some control force is used to maintain the bank.
- Medium — bank angle between 20 and 45 degrees, which the airplane tends to hold constant without control force on the ailerons.
- Steep — bank angle greater than 45 degrees, at which the "overbanking tendency" of an airplane overcomes stability, and the bank tends to increase unless pressure is applied to the aileron controls to prevent it.

When making a turn, the plane tends to lose altitude, because some of the lift is being used to turn the plane, reducing the lift available to hold up the plane. Compensate by pulling back on the yoke to create more lift.

This lesson takes you through a 30-degree bank turn. Notice that you must add a bit of up elevator to maintain steady altitude and that the plane is stable in the bank. Once in the bank, the plane stays there with straight yoke until you actively give aileron in the opposite direction to return to straight and level flight.

When coming out of a turn, remember to plan early. The plane is still turning when you make the transition from a turn to straight flight, so start straightening out ten degrees early. Remember that your lift will increase as you come out of a turn. To keep from "ballooning" into the air as you straighten out, release the extra elevator that you used in the turn.

Lesson 5. Climbs

Climbs and climbing turns are basic flight maneuvers in which the pitch attitude and power result in a gain in altitude. As with other maneuvers, climbs should be performed using both flight instruments and outside visual references.

The climb is broken into three phases — entry, constant climb, and level off.

On entry, pitch the aircraft nose up, then add full power. Generally, add pitch before power to avoid increasing engine RPM above redline, caused by the lack of resistance in level flight.

After entry, you are in a constant climb at full power. You must use pitch to control your climb airspeed. Hold pitch constant and wait for airspeed to stabilize. Make slight changes in pitch until the desired climb airspeed is reached.

When climbing, you usually have some goal in mind: clearing obstacles as quickly as you can (best ANGLE of climb), getting to a higher altitude as fast as possible (best RATE of climb), or efficiency and taking it easy on the engine (cruise climb). An airplane's flight manual tells what these speeds are.

When nearing the target altitude, pitch downward to reduce your climb. As a general rule, start leveling off at 10% of your vertical velocity from your target altitude, in feet. In other words, if you are climbing at 700 feet per minute, start leveling off at 10% of 700, or 70 feet, below your target altitude. Keep full power on until cruise speed is reached, then adjust power to control airspeed in level flight.

Lesson 6. Cruise Descents

Descents also have three phases — entry, steady descent, and level off.

On entry, reduce power, then use pitch to control vertical descent speed. Power should be reduced initially by about 500 RPM. After a descent is established, adjust power to hold desired cruise speed.

Once you are in a steady descent at the desired airspeed and sink rate (feet per second vertical speed), keep descending until you near your target altitude. When at 10% of your vertical speed from the goal altitude, start to level off. For example, at 500 feet per minute sink rate, start to level off at 50 feet above your target altitude.

Level off by increasing throttle to cruise power. Use pitch to hold constant altitude in level flight.

Lesson 7. Slow Descents

Slow descents are used during landing approaches and should be practiced before trying to land the plane. The descent in this lesson occurs at about 70 knots.

During the slow descent, reduce power greatly. With a low power setting, your airspeed will drop dramatically. When it gets near the 70-knot goal, use pitch to control airspeed. Keep it at 70 knots using elevators. If you get too slow, put your nose down to keep up the speed. If you want to maintain a certain sink rate (1000 feet per minute, for example), use power to adjust your sink rate.

The FAA and flight instructors vary in their thinking on the "pitch/power rule," but most instructors advise using pitch to control airspeed and power to control vertical speed (glidepath for landing).

Takeoffs and Departure Climbs

Lesson 8. Takeoff Roll

Taking off is relatively easy. You simply apply full power and the plane accelerates until it gets to flying speed (the *takeoff roll*), then it leaves the ground (the *lift off*). You then climb away from the runway (the *initial climb*).

Here are a few important procedures to note on takeoffs:

- Steer down the runway using rudder (aileron/rudder on Flight Simulator).
- Strive for smooth throttle operation when applying the power.
- When you reach *rotation speed* (about 80 knots), smoothly *rotate* the aircraft by pulling back on the yoke (raising elevators). Do not jerk the plane off the ground.
- Pay attention to pitch to avoid getting pitch too high and airspeed too low, which can result in a stall.

After the takeoff, you will establish a standard climb configuration.

Lesson 9. Crosswind Takeoff

Although wind compensation is considered a more advanced topic, it is covered in this basic lesson because of its importance in air traffic control. When you take off, you must stay in line with the runway to avoid drifting in the traffic pattern.

In a real aircraft, this requires independent use of aileron and rudders. When you activate this lesson, aileron and rudders will be unlinked for uncoordinated flight.

To perform a crosswind takeoff, go down the runway applying left aileron into the left crosswind (wind blowing across the runway from left to right). Steer the plane down the runway using the rudder controls.

Once you lift off, apply aileron and rudder into the wind until you have turned enough that your correction angle (crab angle) keeps you lined up with the runway. Look behind you to see any drifting. Then level your wings and keep on a straight course, aligned with the runway.

Landing Approaches and Landings

The toughest basic of flying is landing. There are many landing techniques (normal, short field, power approach, crosswind, and others), but the lesson in this section will stick to a simple, straight-in, normal landing under no-wind (or headwind) conditions.

Lesson 10. Final Approach, Flare, and Touchdown

The way to assure yourself of a safe, easy landing is to set up a very good approach.

You must approach the runway at the proper airspeed. If you are too fast, you will overshoot or hover above the runway for a long distance before touching down; if you are too slow, you may touch down in the field before the runway.

You must approach the runway with the proper descent angle. Long, shallow approaches with power on can be dangerous, especially if there are many ground obstacles, or you have an engine failure. Too steep an approach can make flaring difficult.

This lesson first sets up a good approach that takes you toward the runway at 70 knots with power almost cut, and flaps down. This is a "full stall" landing. During the approach, airspeed is controlled with pitch, just as in slow flight.

It takes practice to judge whether you are headed toward the runway. Landing on the first third of the runway is the goal. If it looks like you're going to overshoot, cut power. If it looks like you're coming in too short, add a bit of power. NEVER try to stretch the glide by applying back elevator pressure alone to reach the desired landing spot. This will actually shorten the gliding distance if power is not added simultaneously. Proper angle of descent and airspeed should be maintained by coordinating pitch attitude changes and power changes.

Finally, when 10 to 20 feet above the ground, the *roundout* or *flare* is started. You break the glidepath, and try to hold the wheels about one foot above the runway as the plane bleeds off speed. This requires more and more up elevator as the plane slows, until finally the plane stalls (loses all lift because the angle of attack is so great as a result of having the elevators so far back) and touches down.

Once on the ground, raise the flaps to keep the plane on the ground. Use the brakes to slow to a stop.

12 Advanced Flight Training

Now it's time to go beyond the basics needed to fly the plane and learn some advanced flight techniques. These maneuvers teach you how the aircraft responds in marginal conditions. This can be important in emergency situations.

Stalls

When a plane flies too slowly, and its angle of attack to the oncoming (relative) wind gets too high, the plane stalls and loses all its lift. One wing usually stalls slightly before the other because conditions are never totally symmetrical for both wings. Losing all the lift on one wing causes the plane to bank quickly in the direction of the stalled out wing, and can cause the plane to roll. Modern aircraft are designed with some twist in their wing, which gives the portion of the wing closest to the aircraft a higher angle of attack, thus making the wing surface near the aircraft's center stall first. This greatly reduces the rolling tendency.

Lesson 1. Full Stalls—Power Off (Approach)

Power-off stalls are usually performed with normal landing approach conditions, to simulate an accidental stall during a landing approach. Before executing these stalls, it's important to go to a practice area that is clear of traffic, to look around for any air traffic that may pose a problem, and to be at an altitude high enough above ground level to assure recovery after the stall, with lots of altitude to spare.

To perform the stall, put the aircraft into landing configuration and cut the power (gear and flaps are put down when the speed is low enough). Apply carb heat to preclude any icing. As the plane slows down, use the elevators to hold constant altitude flight. When approach speed is reached, put the plane into an approach attitude, as if it were coming in for a landing. Adjust pitch to maintain airspeed.

When the approach attitude and airspeed have stabilized, raise the nose (elevators raised) to an attitude that will induce a stall. Maintain directional control with the rudder, and hold the wings level with aileron until the stall occurs. You can tell when you are in the full stall by the full up elevator, high sink rate, uncontrollable nose-down pitching, and buffeting.

Recover from the stall by reducing elevator (and thus, angle of attack), and apply full throttle (slowly). Lower the nose as necessary to regain flying speed, then return to straight and level flight. Note the altitude loss. You wouldn't want a stall like this to happen near the ground.

Lesson 2. Full Stalls—Power On (Departure)

Power-on stall recoveries are practiced from straight climbs, and climbing turns with 15- to 20-degree banks, to simulate an accidental stall occurring during takeoff and departure climbs. Aircraft configuration (flaps and gear) is that used for takeoff.

This lesson steps through the stall sequence: attain climb attitude and speed, raise the nose to an attitude that is obviously impossible to maintain, and hold that attitude until a stall occurs. Full power is used during this stall.

Recover from this stall by reducing angle of attack (releasing elevator back pressure). Lower the nose to regain flying speed, and return to straight and level flight.

Lesson 3. Accelerated Maneuver Stall

This is the final stall lesson. Gross weight and load factors influence the airspeed at which a plane will stall. At the same gross weight, configuration, and power setting, a plane will always stall at the same indicated airspeed if no acceleration is involved. Excessive maneuvering loads, imposed by turns, pullups, or other abrupt flight path changes, can cause a stall. Stalls entered from such flight situations are called *accelerated maneuver stalls*, a term that has no reference to the airspeeds involved.

In this lesson, it is assumed that our aircraft has a *type certificate* of the Utility or Aerobatic category and is approved for accelerated maneuvers. The object of demonstrating this stall is to show how it may occur and to learn how to recover from it quickly. A prolonged stall condition should never be allowed.

This stall is set up by getting into a banked turn. Apply increasing back pressure on the elevators, which increases the centrifugal force and the wing loading. After airspeed reaches the design *maneuvering speed* (the speed at which maneuvers that create excessive G forces could damage the aircraft's structure), increase back pressure until a definite stall occurs.

Recover by releasing back pressure and increasing power.

Other Advanced Instruction

The following lessons are not as dramatic as stalls, but show some advanced techniques that you will eventually need when flying.

Lesson 4. Uncoordinated Flight

An airplane is in coordinated flight when it's flying straight through the relative wind rather than slightly sideways through it. An airplane is most efficient in this attitude, and is safest, too. The ball in the turn coordinator (see Figure 1.1) shows aircraft coordination. If it's centered, the aircraft is coordinated.

On Flight Simulator, an option (auto coordination) on the Sim menu links rudder and aileron together. When this is on, the appropriate amount of rudder for yaw and aileron for bank is applied in turns to keep the plane coordinated. In this lesson, the link is turned off and the individual effects of the aileron and rudder are examined. The plane is banked with the aileron and a straight rudder, resulting in a slow, sloppy, uncoordinated turn. Then the rudder is used alone, and the airplane yaws as it drags itself around a turn with the coordination ball pushed to one side. This is known as a *skid*, and should be avoided during normal flight because it can cause an accidental spin.

Lesson 5. Slips

This lesson takes uncoordinated flight one step further, showing a good use for flying in an uncoordinated attitude — the slip. A slip is performed by putting a plane in a bank using the ailerons. The bank tends to make the plane turn, but reverse rudder is applied to keep the plane from turning. The plane ends up flying at a constant heading, but in a bank. Since the plane is banked, side forces are produced, and the plane moves to the right or left, depending on the direction of bank.

This effect is useful when landing in a crosswind where you must keep the plane lined up with the runway, but a wind makes it necessary to add a left or right component to your speed.

When in a slip, drag is increased because the aircraft is uncoordinated, making the slip useful for slowing down a plane.

Lesson 6. Steep Turns

Steep turns of 45 to 55 degrees are quite challenging and border on the aerobatic. In this lesson, full power is applied and you roll into a turn. A lot of up elevator is required to maintain altitude. When you roll out of the turn, it's important to release up elevator. Ballooning out of a turn is a common mistake when executing steep turns.

Lesson 7. Traffic Pattern

Figure 12.1 shows a basic rectangular traffic pattern. This left-hand (counter-clockwise) pattern assures that air traffic flows into and out of airports in an orderly manner. Traffic patterns, their direction, and their altitude are established based on local conditions. At simple airports without control towers, and, unless the airport displays approved visual markings indicating that turns should be made to the right, use the standard left-hand pattern.

This lesson shows an entry into the pattern on the downwind leg. A left "turn to base" is performed, followed by a final approach. The landing is aborted, and a go-around is performed. You climb out on the upwind leg, turn crosswind, and reenter the downwind leg.

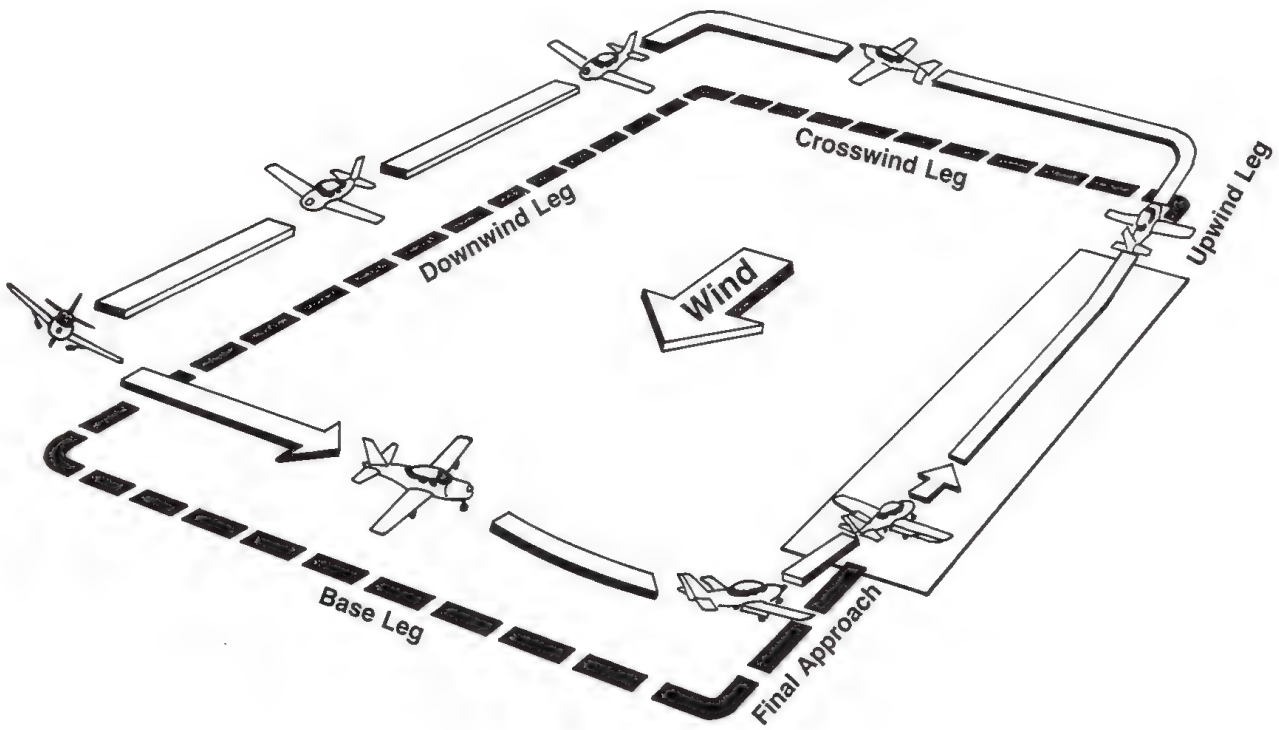

12.1 Basic Rectangular Traffic Pattern

Lesson 8. VOR Tracking with Wind

Chapter 14, "Navigation Course," explains VOR use. It's important to see it in action, however.

In this lesson, you tune in a VOR station on the NAV 1 radio and center the OBI needle. You fly a course to the VOR and notice the DME distance to station changing. The needle starts to drift due to the wind. Center the needle, but this time, compensate for the wind by heading into it a bit. The needle now stays centered as you fly directly toward the station with the corrected heading.

13 Aerobatics Course

This chapter shows you seven aerobatic maneuvers in the flight lesson fashion used in the beginning and advanced lessons. Included are simple aerobatics (spins, loops, and rolls) and more complex aerobatics (inverted flight, the split S, the Immelman, and the Hammerhead). Follow the steps, watch the instructor, and then try the aerobatics yourself.

Simple Aerobatics

Simple spins, loops, and aileron rolls are covered first.

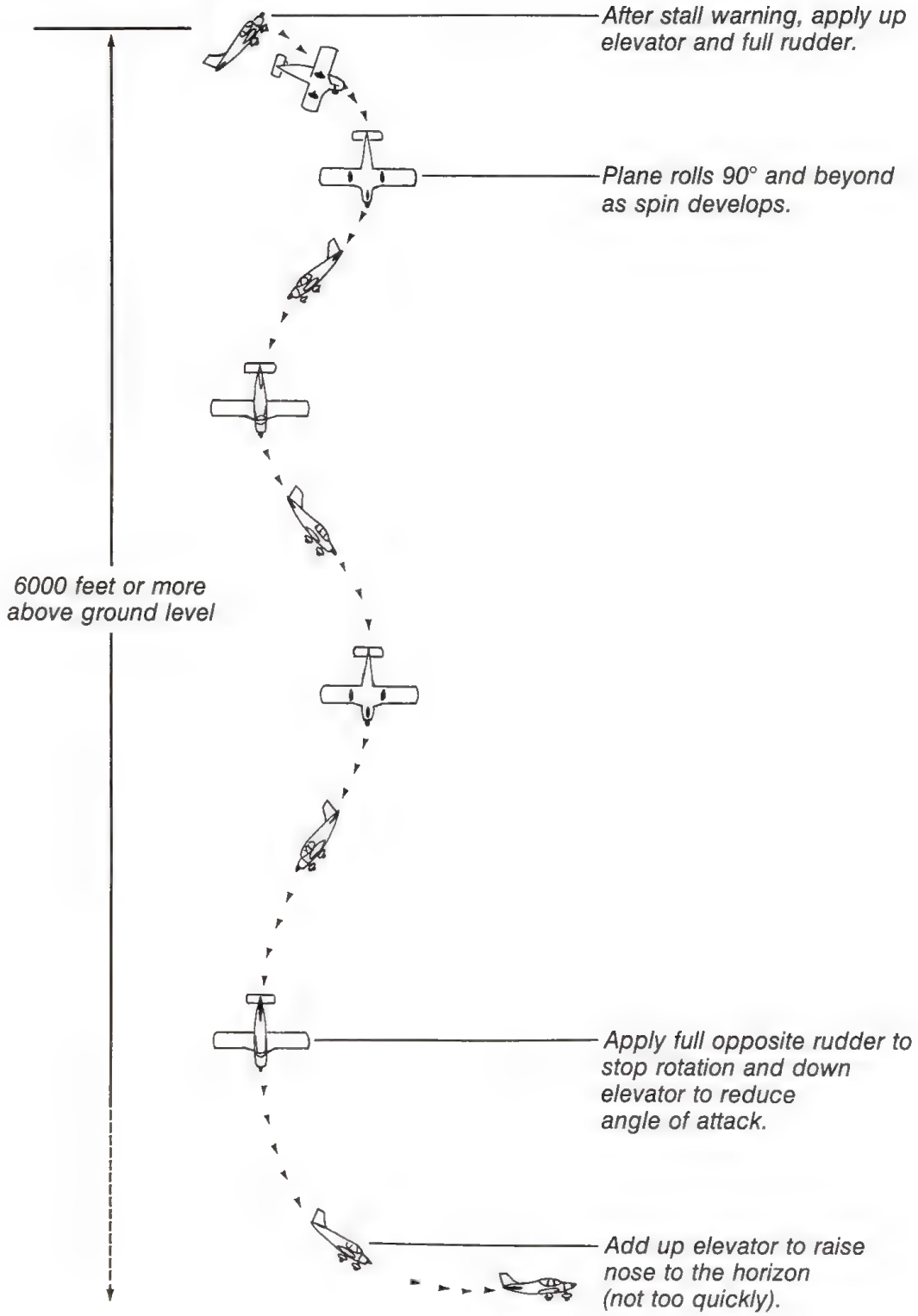
After stall warning, apply up elevator and full rudder.
Plane rolls 90° and beyond as spin develops.
6000 feet or more above ground level
Apply full opposite rudder to stop rotation and down elevator to reduce angle of attack.
Add up elevator to raise nose to the horizon (not too quickly).

13.1 The Spin

Lesson 1. The Spin

The spin is the simplest aerobatic maneuver, and any plane is capable of it. Five to ten percent of all small airplane accidents are caused by accidental spins, so it's a good idea to get proficient with this aerobatic maneuver, especially the recovery phase.

A spin is a stall where one wing stalls before the other. This causes one wing to drop and puts the plane in a corkscrew descent. The plane remains in the spin, autorotating, until the pilot moves the controls and stops it. Figure 13.1 shows the spin.

Select Spin from the Flight Instruction menu to see the procedure, watch the instructor fly one, and then try one yourself.

Making a Spin

1. Put Flight Simulator in Uncoordinated Flight mode and climb to 6000 feet above ground level (AGL).
2. In cruising flight (no flaps), bring the throttle back to idle power.
3. Use the elevators to raise the nose slowly to a point slightly above the horizon.
4. Hold this attitude until the stall warning sounds.
5. Apply additional up elevator and full rudder (left or right, to spin left or right, respectively).
6. The plane will roll to a 90-degree bank and beyond as the spin develops.

Recovering from a Spin

1. Recover from the stall by using full opposite rudder to stop rotation.
2. Apply down elevator to reduce your angle of attack.
3. Complete recovery by applying up elevator to raise the nose to the horizon, being careful not to apply elevator too quickly, risking another stall.

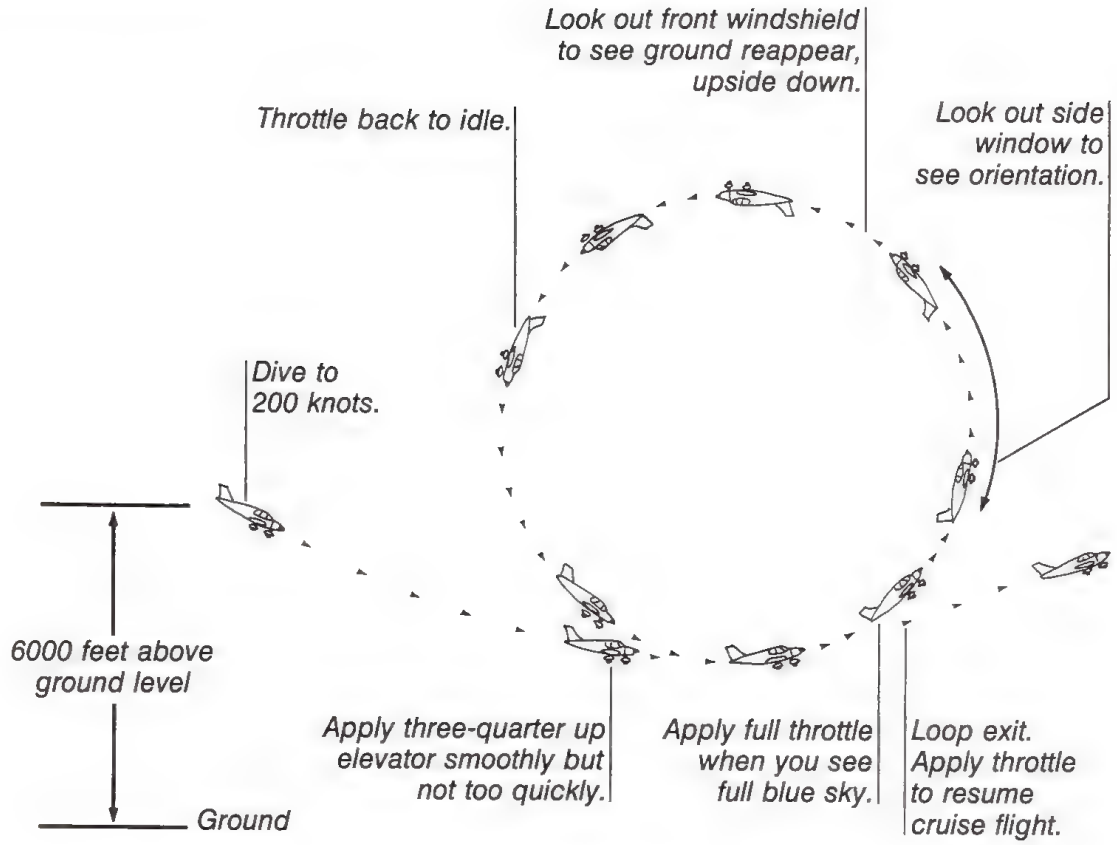
Look out front windshield to see ground reappear, upside down.
Throttle back to idle.
Look out side window to see orientation.
Dive to 200 knots.
6000 feet above ground level
Ground
Apply three-quarter up elevator smoothly but not too quickly.
Apply full throttle when you see full blue sky.
Loop exit. Apply throttle to resume cruise flight.

13.2 The Loop

Lesson 2. The Loop

This is the second-easiest aerobatic maneuver. You use elevator and throttle to pitch the plane through 360 degrees of pitch, flying a vertical circle in the sky. The key to a successful loop is to obtain enough airspeed to allow the plane to fly through the complete circle without stalling. Figure 13.2 shows the loop.

Select Loop from the Flight Instruction menu to see the procedure, watch the instructor fly one, and then try one yourself.

Making a Loop

1. Put Flight Simulator in Autocoordinated Flight mode and climb to 6000 feet AGL.
2. Get into normal cruise flight, with flaps up at normal cruise throttle.
3. Use down elevator to dive rapidly until airspeed reaches about 200 knots.
4. Apply up elevator smoothly, but not too rapidly, until about three-fourths up.
5. After the nose rises and you see blue sky through your windshield, apply full throttle. Look out a side view to see your pitch orientation.
6. When the loop is nearly half complete, switch to forward view and watch the earth reappear upside down.
7. Once the loop is three-fourths complete, bring the throttle back to near idle, to avoid overrevving your engine as you dive.

Recovering from a Loop

- As you come out of the loop level, apply throttle as desired and resume normal cruise flight.

Lesson 3. Aileron Rolls

In this maneuver, the ailerons are used to roll the plane through 360 degrees of bank. This maneuver is fairly simple because your plane is capable of very rapid roll rates. One of the most difficult aspects of the aileron roll is getting your plane to stop rolling at the proper time. Figure 13.3 shows an aileron roll.

Select Aileron rolls from the Flight Instruction menu to see the procedure, watch the instructor fly one, and then try one yourself.

Making an Aileron Roll

1. In Uncoordinated Flight mode, get into cruise configuration and begin a shallow dive to pick up 30 knots over cruise speed.
2. Use the elevator to raise the nose to point slightly above the horizon.
3. Neutralize the elevator and apply the aileron in the direction you want to roll.
4. The plane will roll past vertical (90-degree bank), upside down (180 degrees), vertical again (270 degrees), and then roll toward level.

Recovering from an Aileron Roll

1. Begin to neutralize your ailerons shortly before you are level again.
2. If properly timed, you will be near level attitude when the roll stops. Resume cruise flight.

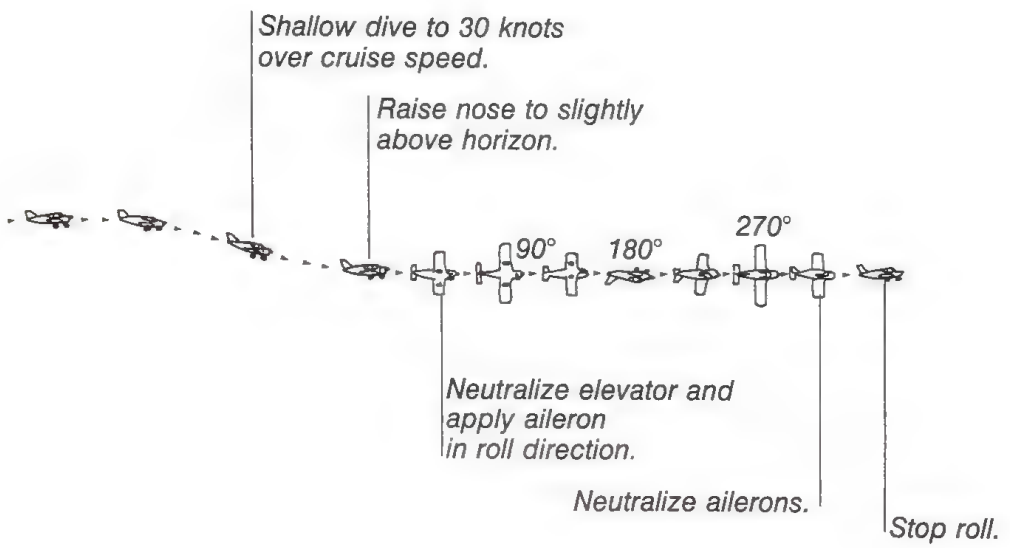

13.3 Aileron Roll

Complex Aerobatics

The following aerobatic maneuvers are more complex than the first three and require more concentration and control to perform correctly.

Lesson 4. Inverted Flight

Inverted, or upside down, flight is quite disorienting. This maneuver is an extension of the aileron roll, but you must begin neutralizing aileron as the plane rolls past vertical to stop the roll as the plane turns upside down.

At this point, the horizon and artificial horizon will be upside down. The elevator works backward. Pushing forward "drops" the nose toward the sky, but ailerons work as usual. If you start losing altitude while upside down, remember to push the nose down (down elevator).

Come out of inverted flight by completing the last half of your aileron roll. Figure 13.4 shows inverted flight.

Select Inverted flight from the Flight Instruction menu to see the procedure, watch the instructor fly one, and then try one yourself.

Flying Inverted

1. Begin an aileron roll.
2. Begin neutralizing aileron shortly after rolling past 90 degrees to stop the roll so the plane is upside down.
3. Use reverse elevator to control pitch and establish level, inverted flight.

Recovering from Inverted Flight

- Apply aileron to complete the last half of the aileron roll.

13.4 Inverted Flight

Lesson 5. Split S

This maneuver is actually an alternate way of coming out of inverted flight. Instead of completing the aileron roll, you pull back on the elevator, close the throttle, and do the last half of a loop. Figure 13.5 shows a split S.

Select Split S from the Flight Instruction menu to see the procedure, watch the instructor fly one, and then try one yourself.

Flying a Split S

1. Begin an aileron roll.
2. Begin neutralizing aileron shortly after rolling past 90 degrees to stop the roll so the plane is upside down.
3. Once in inverted flight, apply up elevator and close the throttle to do the last half of a loop.

Recovering from a Split S

- As you come out of the loop level, apply throttle as desired and resume normal cruise flight.

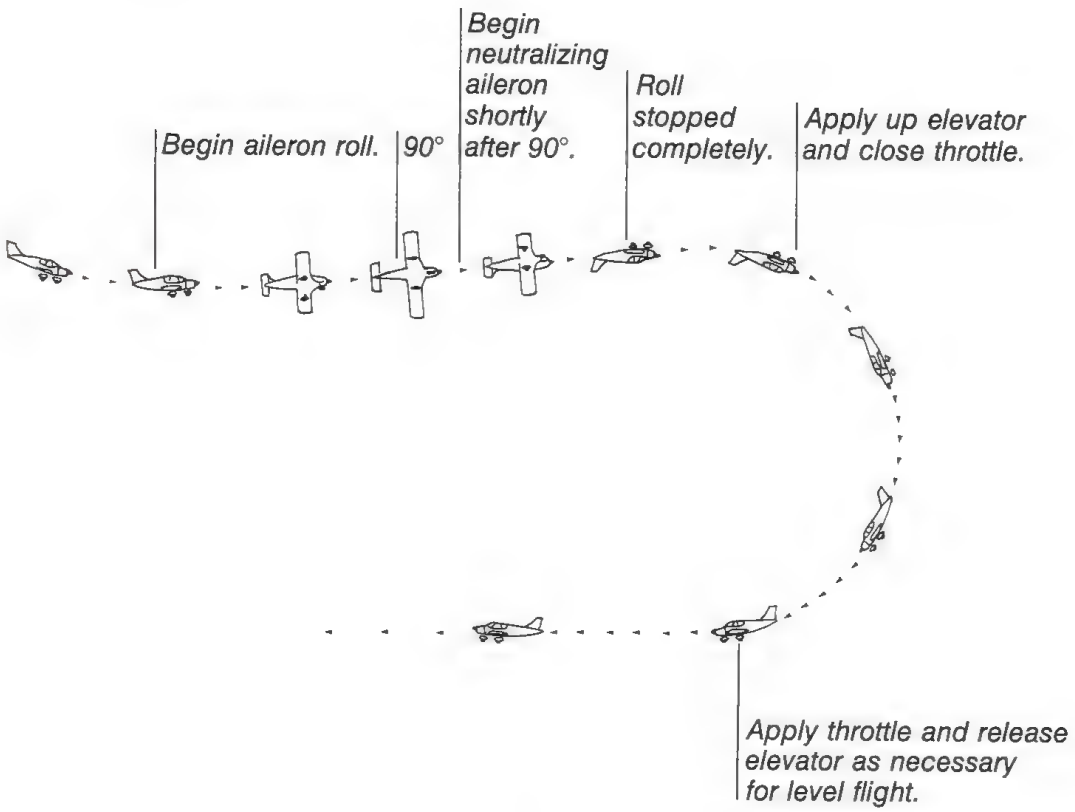

13.5 Split S

Lesson 6. Immelman

This maneuver was invented by a German ace, Max Immelman, and was used as a tactical maneuver to evade other aircraft in a dogfight. The Immelman turn is a half loop followed by a half roll (as opposed to the split S, which is a half roll followed by a half loop). Figure 13.6 shows an Immelman.

Select Immelman from the Flight Instruction menu to see the procedure, watch the instructor fly one, and then try one yourself.

Flying an Immelman

1. Configure the plane as described in the Loop.
2. Note your heading and begin the loop.
3. Neutralize elevator the moment the plane becomes exactly inverted at the top of the loop. This stops the plane in inverted flight at a relatively slow airspeed.
4. Follow through with a half roll to level off on top.

Recovering from an Immelman

- Fly straight and level to cruise speed.

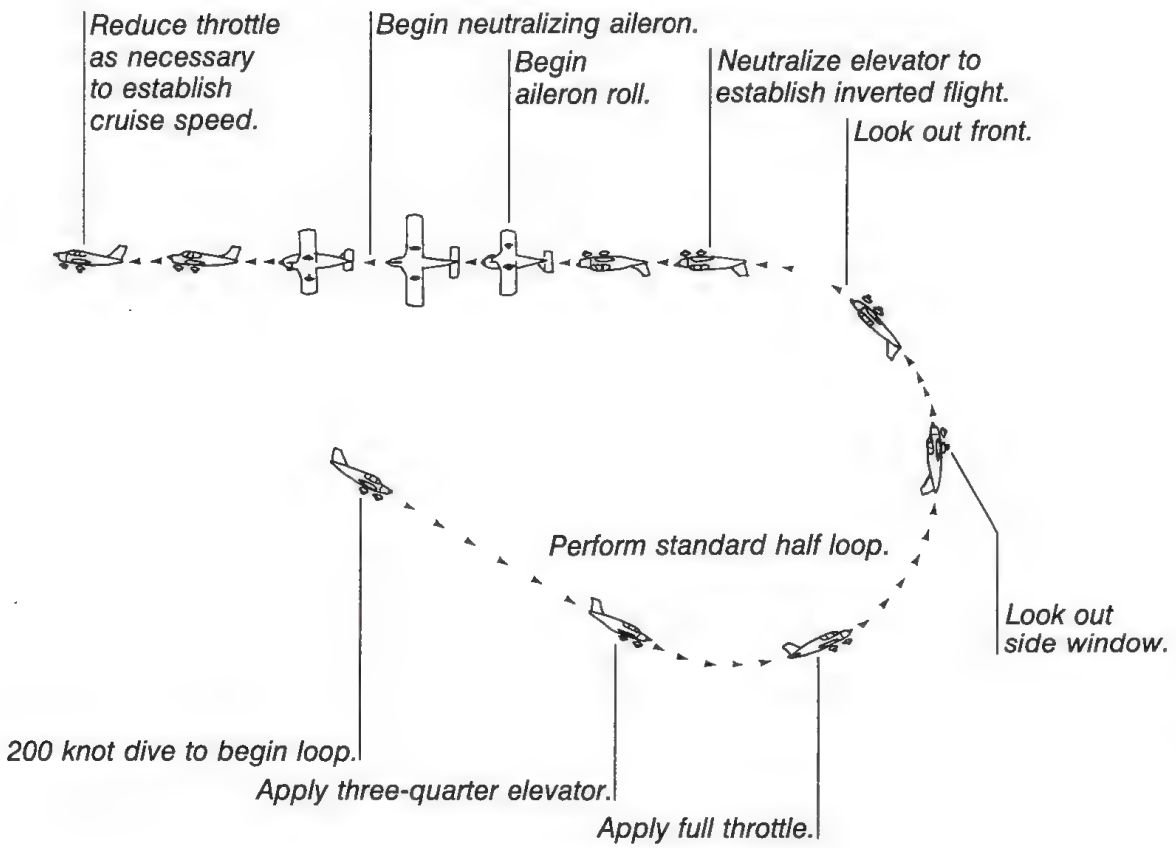

13.6 Immelman

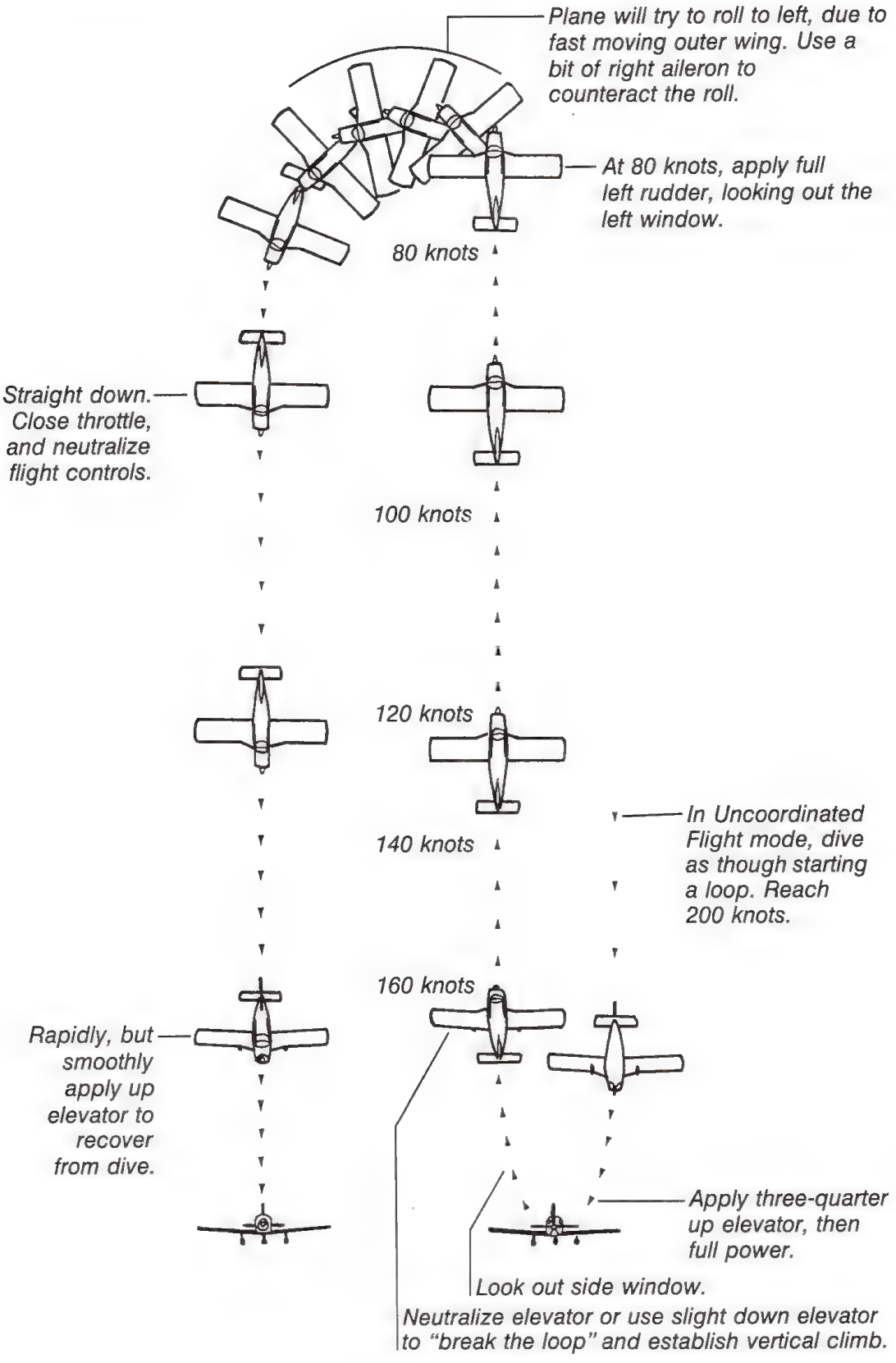

13.7 Hammerhead

Lesson 7. Hammerhead

The final aerobatic maneuver is the Hammerhead turn or Hammerhead stall. It is often referred to as a wingover, since that describes what the plane does, but wingovers also describe other less difficult maneuvers. Uncoordinated Flight mode is used to perform this maneuver. Figure 13.7 shows the Hammerhead.

Select Hammerhead from the Flight Instruction menu to see the procedure, watch the instructor fly one, and then try one yourself.

Flying a Hammerhead

1. Put Flight Simulator into Uncoordinated Flight mode and dive as though starting a loop.
2. Apply three-quarter up elevator and full throttle for a vertical climb.
3. Look out the side window. Just as the bottom of the wing comes up, perpendicular to the horizon, neutralize the elevator or apply slight down elevator. You are now in a vertical climb.
4. When airspeed drops to about 80 knots, leave the elevator where it is and apply full left or right rudder, looking out the left or right window respectively.
5. As the plane yaws at the top of the Hammerhead, the fast moving outer wing develops more lift and tends to make you roll. Carefully use a bit of opposite aileron to counteract this roll. This takes a lot of practice.
6. Once the nose has yawed 180 degrees to straight down, close the throttle, neutralize all flight controls, then rapidly but smoothly apply up elevator to recover from vertical dive back to level flight.

Recovering from a Hammerhead

1. Turn to the proper heading, because this maneuver changes your heading by 180 degrees.
2. Resume cruise flight.

14 Navigation Course

Figure 1.1 and Chapter 1, "Basic Window Display and Flight Instruments," showed the location and described the basic functions of the navigation instruments and how to set them. This chapter tells how to use the instruments and visual cues to navigate the plane cross-country and in conditions where you cannot see ground references (flying above the clouds, for example).

Pilotage

Flying cross-country from one visible landmark to another, using only a flight chart, is known as *pilotage*. This method requires that the flight be made at fairly low altitudes to identify landmarks easily. Pilotage cannot be used in areas that lack adequate landmarks or when visibility is low.

Pilotage is easy to perform and does not require special equipment. It's frequently impractical, however, because you often fly a zig-zag course between landmarks, resulting in a longer flight.

Dead Reckoning

Dead reckoning is the navigation of an airplane solely by computations based on airspeed, course, heading, wind direction and speed, ground speed, and elapsed time. You point the plane in the direction of your destination (plus a correction factor for wind), and fly at a known speed for the amount of time it takes to cover the distance.

Dead reckoning is seldom used alone because even the slightest deviation in course could place you miles from the target destination.

The most common form of VFR navigation is a combination of dead reckoning and pilotage — flying in a computed direction, correcting for errors using landmarks that come into view along the way. There may be stretches for miles where no landmarks are seen, but dead reckoning over these few miles keeps the plane well enough on course, and avoids the zig-zagging of pure pilotage.

VOR Navigation

VORs are radio stations that transmit an omnidirectional synchronization signal followed by a circular sweeping directional signal. The NAV receiver in the aircraft decodes these signals to determine the angle or radial from the station you are on. You can think of radials as directional beams radiating outward from the VOR station like spokes of a wheel (see Figure 14.1).

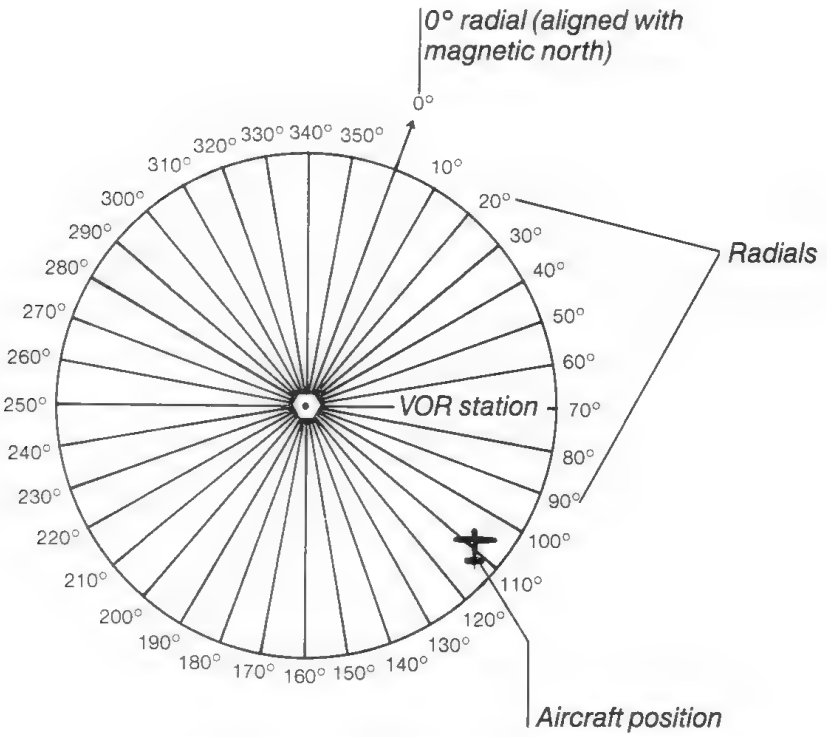

14.1 VOR Station and Radials

The Omni-Bearing Indicator (OBI), or VOR indicator, lets you determine what VOR radial your plane is on and helps you fly along radials toward or away from the VOR station.

As shown in Figure 14.2, the OBI consists of the course deviation indicator (CDI), course selector, course selector knob or Omni-Bearing Selector, and the TO-FROM indicator.

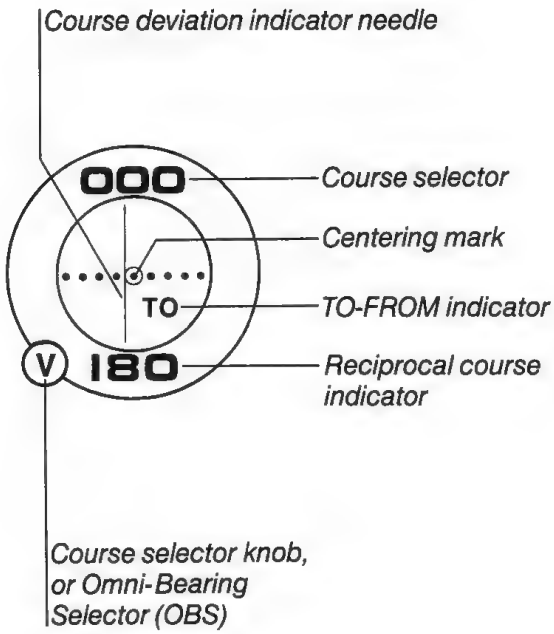

14.2 VOR Indicator

Course Deviation Indicator (CDI) This is a vertical needle that shows your deviation from the VOR radial set by the course selector. If the needle points to the right of center, the radial lies to the right of your current position.

Course Selector This is the numeric value that appears at the top of the OBI. This number indicates the radial to which your OBI receiver is set.

Course Selector Knob or Omni-Bearing Selector The course selector knob is used to select the radial on which you want to fly or to find the radial you are currently intercepting. The course selector value appears on the OBI. The NAV receiver interprets the radial on which the aircraft is currently located, and displays the relationship between this and the selected course on the OBI. The current radial may be "read out" by turning the course selector knob (clicking on the right or left side of the knob; or pressing V, followed by 1 or 2, then + or − to increase or decrease the setting) until the CDI needle is centered and by observing the TO-FROM indicator to resolve any ambiguity.

TO-FROM Indicator This indicator shows whether you are on the radial shown by the course selector or on the radial 180 degrees away from it. When the TO indicator is displayed, the CDI shows course deviation as described above if you are flying toward the VOR station. When the FROM indicator is displayed, the CDI works as outlined above if you are flying away from the VOR station. You can fly toward a VOR station with a FROM indication, or away from a VOR with a TO indication, but the CDI will work backwards. If the needle points to the right of center, the radial lies to the left of your current position.

Distance Measuring Equipment (DME)

DME registers nautical miles from the VOR to which you are tuned. Most VORs in real-world navigation, and all VORs in Flight Simulator, have DME capabilities.

The Flight Simulator DME system is connected to the NAV 1 or NAV 2 radio. The VOR station tuned on the NAV radio is the one to which the distance measured corresponds. Occasionally, the DME will be blank when you have a valid VOR tuned in and working. The DME system does not have the range that the VOR's directional navigation signal has. If you are so far away from a VOR that its DME is no longer working, you are too far from the VOR to rely on its directional signal for navigation. In such a case, switch to a new VOR.

You can also read groundspeed to or from a station by pressing F. This gives a timed average of speeds over the last few minutes. Remember, this is the component of your speed toward the station and reflects ground speed only when flying directly to or from the station.

Automatic Direction Finder (ADF)

The Automatic Direction Finder (ADF) is used with nondirectional radio beacons (NDBs). When the ADF receiver is tuned to an NDB, the needle on the bearing indicator (see Figure 14.4) points to the station, and shows the bearing relative to the nose of the aircraft (the relative bearing). The magnetic bearing to the station can be calculated by adding the relative bearing to the aircraft's magnetic heading.

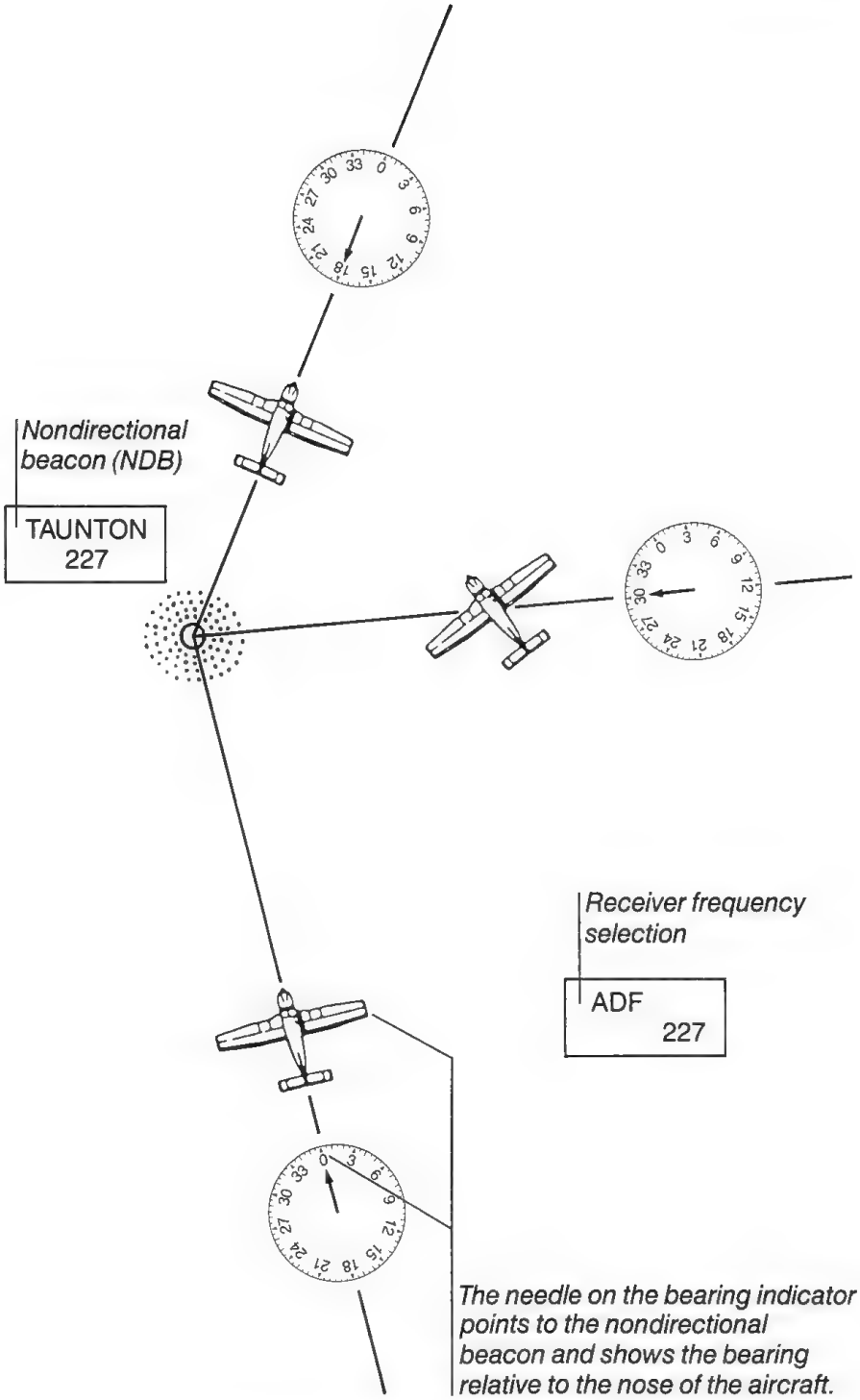

14.4 Automatic Direction Finder

Instrument Landing System (ILS)

The Instrument Landing System (ILS) is a set of navigation facilities that direct you to a runway for a safe landing in nearly any kind of visibility conditions. The four main systems involved are:

- Localizer — a sort of VOR that can be used only on one radial, which is lined up with the runway. You tune it in on your NAV radio like a normal VOR station, but you don't set the OBI to a radial direction, because the direction is set automatically. Needle movement is four times as sensitive as a normal VOR station, so you can hold your horizontal course very precisely.
- Glideslope — a sort of VOR turned in an up/down direction. The glideslope needle on OBI 1 is used to track the glideslope. This instrument, like the localizer, is very sensitive, and deflects from needle up to needle down in 1.4 degree glideslope variation.
- VHF Marker Beacons — beacons placed on the ground directly below the localizer path at preset distances. They transmit a very tight radio beam, straight up, so the OMI (outer, middle, and inner) marker-light receiver on the plane picks them up when you fly directly over the beacon. This gives information about the distance to the runway. The marker beacons emit tones related to each marker in the form of dots (short tones) and dashes (long tones) in a unique sequence:

Marker	Tones
Outer Marker	Repeating dashes
Middle Marker	Alternating sequence of dots and dashes
Inner Marker	Repeating sequence of dots

- Approach lights — normally installed on the ILS runway to provide for transition from instrument to visual flight.

This instrument system lets you make a precision approach by tracking the localizer and glideslope down to the runway. The approach is precise enough, in most cases (given a lack of obstacles and good approach lighting), to guide you down to a decision height of 200 feet AGL, one-half mile short of the runway.

15 Flight Analysis and Course Plotting

This chapter describes the flight analysis system that helps you improve your landings and maneuvers, and the course plotting system that lets you plot and review your course.

Flight Analysis

When flying a plane through landings and maneuvers, you get a general idea of your actions, but it's hard to tell your exact flight path. Flight Analysis is designed to give you feedback concerning your flight path after maneuvers are performed. You can see how round your loops were, how good your flare was, or your flight path during a stall.

Landing Analysis

Landing Analysis evaluates your landing. It monitors a landing from the time you are 100 feet above the runway. After your landing, a graph is produced that shows:

- Your flight path to the runway
- Your vertical velocity when you touched down
- The point where stall occurred

Activating Landing Analysis

1. Set up a landing approach. It can be straight in or in a pattern. You must be more than 100 feet above the runway.
2. Select Flight Analysis from the Mode menu. The Flight Analysis menu will appear.
3. Select option 1, Landing Analysis, from the menu.
4. Make the landing. When you roll to a stop, the analysis graph appears.
5. Press ESCAPE to continue with normal flight.

Maneuver Analysis

Maneuver Analysis is similar to Landing Analysis, but it is not triggered by the 100-foot rule. Course recording begins the moment you leave the Flight Analysis menu and ends when you press the backslash (\) key.

Activating Maneuver Analysis

1. Set up for a maneuver.
2. Select Flight Analysis from the Mode menu. The Flight Analysis menu appears.
3. Select Maneuver Analysis from the menu.
4. Perform the maneuver.
5. Press the backslash (\) key when the maneuver is finished. The analysis graph appears.
6. Press ESCAPE to continue with normal flight.

Course Plotting

The Course Plotting system lets you record your course and display it against the scenery over which you have flown. In Course Recording mode, the aircraft's three-dimensional position is recorded at preset intervals. In Course Display mode, white line segments are drawn between these points. The white-line string appears as a "smoke trail" in the sky. You can record and display at the same time, if you want.

Plotting Your Course

1. Select Flight Analysis from the Mode menu.
2. Select Course Plotting from the Flight Analysis menu.
3. Select option 1, Recording, to begin plotting your course. This should be set to on.
4. If you plan on flying cross-country, set option 2, Resolution, to Coarse.

   If you are doing a precision maneuver, set Resolution to Fine. Use fine resolution mode for skywriting.

   This specifies how often samples are taken, and how fast the recording buffer gets filled up. The course buffer is limited in size. It will start erasing the oldest part of your course plot if it runs out of buffer space.
5. To erase any old plot information in the buffer and start a fresh smoke trail, select option 5, Clear course buffer.

Reviewing Your Course

- Select option 3, Display, from the Course Plotting menu to begin reviewing your course. This should be set to on. This enables a projection of the white-line-segment smoke trail/course plot. Whatever is currently in the course buffer is displayed.

16 EFIS/CFPD Display

Electronic Flight Instrument Systems (EFIS) is the wave of the future in aircraft navigation and control. These systems encompass everything from engine controls and checklists on CRT displays in cockpits to advanced heads-up displays (HUDs) that display symbology and instrumentation on the pilot's windshield. EFIS systems are usually microcomputer-driven and have some intelligence behind them.

One of the most promising new EFIS systems is the Command Flight Path Display (CFPD). CFPD is a navigation aid that projects a flight path on the pilot's windshield. The best way to describe it is as a "highway in the sky." A series of rectangular plates is laid out in front of you. The path follows the flight path or instrument approach you are supposed to fly.

There is a CFPD approach set up in Flight Simulator. To try it, select EFIS/CFPD Display from the Mode menu.

Select option 1, Highways: Active, to activate the system. When you exit the menu, you will be at the beginning of the CFPD approach.

There are three other controls on this menu: Type, Density and Range. Select Type to choose flat Rectangles (you fly down them like driving down a road), "Yellow Brick Road", or Telephone Poles. Select Density to specify how densely the path appears in front of you. Choose thick, medium, or thin. Select Range to choose how far the path extends in front of you—short, medium, or long.

Entertainment

17 Formation Flying, and Crop Dusting . . . 137
18 Multi-Player Flight . . . 139
19 World War I Ace . . . 145

Entertainment

When you get past all the practical aspects of flying, most pilots will tell you that flying is just plain fun. Air races, fly-ins, airshows, and skywriting are all events that give flying that unique aviation community spirit. With that spirit in mind, Flight Simulator includes this entertainment section that lets you participate in flying for the fun of it.

Chapter 17, "Formation Flying and Crop Dusting" describes two games included in Flight Simulator.

Chapter 18, "Multi-Player Flight," is similar to formation flying, but the other aircraft has a real pilot behind it — a friend at the other end of a modem. Fly with a friend and send messages back and forth on the COM radio.

Chapter 19, "World War I Ace," is a classic dogfight game that takes place using World War I biplanes.

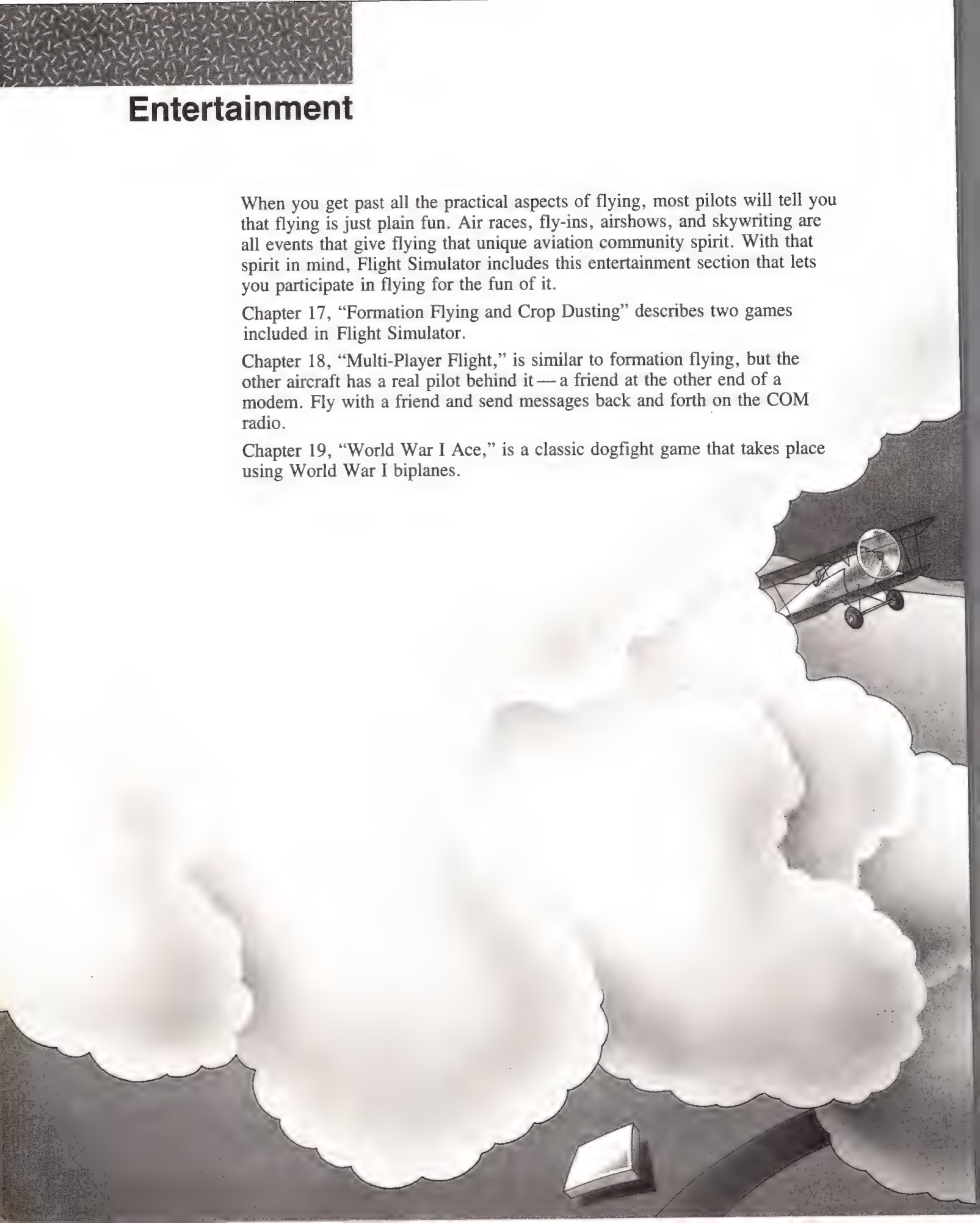

17 Formation Flying and Crop Dusting

This chapter describes two of the games included in Flight Simulator. Formation Flying lets you fly with a computer-controlled aircraft through a series of obstacles and maneuvers. Following the other plane's smoke trail is a real challenge.

Crop Duster is a game where you try to completely cover a field using a minimum of spray.

Formation Flying

Flight Simulator is even more fun when flying with another plane. Keeping the plane in sight and following it through maneuvers is quite challenging, and the visual effects can be quite stunning, especially against a scenic backdrop.

To begin formation flying, select option 2, Flying in Formation, from the Entertainment menu, which is activated from the Mode menu.

The Flying in Formation menu lists seven startup situations. These situations include flying through a city by weaving in and out of buildings, and following the lead plane under a series of bridges, and over the tops of buildings. The lead plane leaves a smoke trail and is always quite easy to find.

To exit from formation flying, choose another flight mode from the Mode or Entertainment menu.

Crop Duster

In this game, you are flying a crop-dusting plane. The smoke system is now a spray system, and you can turn the spray on and off with the I key.

To begin Crop Duster, select option 3, Crop Duster, from the Entertainment menu, which is activated from the Mode menu. The goal is to spray the rectangular field, avoiding obstacles at the end of the field, to get maximum coverage. Make sure to turn the spray off at the end of the field.

The spray drops on the field, so you can see your spray coverage. When you finish spraying, press ESCAPE, or land the plane. You are scored on coverage, quantity of overspray, and how much time you took.

18 Multi-Player Flight

The Multi-Player option on the Entertainment menu enables two or more players, using separate machines, to fly together. Communication between machines is through the COM (serial) port (select among COM 1, 2, 3, or 4). You may communicate with any machine that runs Flight Simulator or Sublogic FS2 and supports the multi-player option.

Connecting Two Machines Together

Direct Cable Connections

If you want to communicate between two computers in the same room, connect the computers using a null modem cable. Plug the DB25 ends (rectangular ends) of the cable into the appropriate ports on the two machines.

Establishing Communications

1. Select option 1, Multi-Player, from the Entertainment menu, which is activated from the Mode menu.
2. Choose option A to select the communications port — COM1, 2, 3, or 4.
3. Choose option B to select the baud rate. It is best to communicate at the highest baud rate that the machines will support, so that response will be quick.
4. Select On-line to begin communications. This tells Flight Simulator to begin sending coordinate information between machines.

Modem Connection

If you want to use two modems for communication, use a standard modem cable to connect a modem directly to the COM port of each computer. You do not need a null modem cable.

Making the Telephone Connection Using Hayes-Compatible Modems

1. Select option 1, Multi-Player, from the Entertainment menu, which is activated from the Mode menu.
2. Choose option A to select the communications port — COM1, 2, 3, or 4.

3 Choose option B to select the baud rate. You will probably want to use 300, 1200, or 2400 baud, depending on the baud rate your modem can handle. The other player must communicate at the same baud rate.

Now, one of you must make the phone call and the other must answer it.

4 The person answering selects Wait for ring and waits for the phone call to come through.

The person making the call selects Dial and then types the phone number in the message box that appears. Note the < symbol to the left of the message line. This means that characters will be sent to the modem, not to the other player. Press ENTER to make the phone call.

5 When a connection has been established, the message Connect will appear on the bottom line of the message box. The computers are now ready to communicate.

6 Both players select On-line to begin multi-player communications. This tells Flight Simulator to begin sending information (such as coordinates) between machines. It also disables the modem echo feature that displayed the Connect message in the previous step.

Making the Telephone Connection Using Other Modems

If you are not using a Hayes-compatible modem, the Dial and Wait for ring options may not work for you.

1 Select option 1, Multi-Player, from the Entertainment menu, which is activated from the Mode menu.

2 Choose option A to select the communications port — COM1, 2, 3, or 4.

3 Choose option B to select the baud rate. You will probably want to use 300, 1200, or 2400 baud, depending on the baud rate your modem can handle. The other player must communicate at the same baud rate.

Now, one of you must make the phone call and the other must answer it.

4 The person making the call selects Messages/Talk to modem. To talk to the modem, type < and then press ENTER. All characters typed on that line are sent to the modem rather than to the other player. You are also removed from on-line mode so that information, such as coordinates, is not sent. Incoming characters are echoed to the bottom line of the message box, so that you know what your modem is saying. Consult your modem documentation to see how to establish a phone connection between machines.

5 Once the connection is made, both players select On-line to begin multi-player communication.

At any time, you can send a command to the modem by selecting Messages/Talk to modem on the Multi-Player menu, and typing < as the first character. This instructs Flight Simulator to send the line to the modem, rather than to the other player. Remember that it also removes you from on-line mode, so you must select On-line to return to multi-player communications.

When you are talking to your modem, all incoming characters are echoed to the bottom line of your message box. Any information the other player sends also appears there. It might appear as garbage. This does not mean that anything is wrong.

Multi-Player Flight

Once you have established communications, you are ready to begin multi-player flight. Place your planes so that they will be visible to each other. The north and east coordinates of the other player's plane appear next to Other player coords. You can set your own coordinates to these values, or near these values, using the Position Set menu.

Select Send Aircraft to send the model of your plane to the other player, and have him do the same for you. Although you have been receiving coordinate information, you will not see his plane until you have received his model.

Now you should be able to find the other plane. The easiest way to do this is to use the Multi-player Track option. In multi-player mode, Track mode tracks the other player's plane from your aircraft, instead of tracking your plane from a movable tower. This is very useful for finding the other plane, when you think it is near you but you aren't sure in which direction to look.

Select Track mode now by pressing the S key to sequence through the view modes. Your view direction might change, and the other airplane should be visible. If it's very small, zoom in for a closer look.

This track feature can be used at any time in multi-player flight to find the location of the other plane, but if you are flying your plane while in Track mode, be careful; your view might not be the view straight out of the cockpit!

Other than the difference in Track mode, all features are available and function the same in multi-player flight as in regular flight.

Sending and Receiving Messages

You may send messages to the other player by selecting Messages/Talk to modem on the Multi-Player menu. When you do so, a message box appears where you type the text to be sent to the other player. When you bring up the message box, all characters typed are directed there, and will NOT have any effect on your flight, such as changing the view.

You can switch from typing message text to controlling your airplane by pressing the ESCAPE key twice. The message box cursor disappears, indicating that all keys now have their normal function. To return to message mode, press the zero (0) key. The cursor reappears, and keypresses are directed to the message box.

To send your message, press ENTER. The message is sent to the other player, and the top line of the message box is cleared. You may type another message if you like, or press ESCAPE to exit message mode.

If you are typing a very long message, it will be sent in pieces as you overrun the message box.

Messages received from the other player are displayed on the bottom line of the message box. If you receive a message from the other player while your message box is not active, it will appear automatically for you. If you want to respond to the message, do so in the normal way, or close the box after reading the message.

Other Multi-Player Options

- The Multi-Player menu includes an option to change your airplane's fuselage color. Your new fuselage color will be visible to you immediately if you look at your airplane from an external view (Spot or Tower mode).

  If you want your opponent to see the new color of your airplane, or, if you select a different aircraft type and you want the other player to see it, you must resend your airplane model (by selecting Send Aircraft). It can take up to one minute at 300 baud to send the airplane model. Other information, such as airplane coordinates, can't be sent during this time, so send the aircraft model only when necessary.
- If you raise or lower your landing gear, this information is automatically sent to the other player, just as your coordinates are constantly being sent.
- To exit multi-player mode, select Quit Multi-Player on the Multi-Player menu. If your connection is through a modem, you might want to disconnect the phone first, by sending a message to the modem using the Messages/Talk to modem option.

Suggestions for Multi-Player Flight

Because an airplane is relatively small, and the field of view is only a small portion of 3-D space, it may be difficult at first to find and keep track of the other player's plane. This becomes easier with practice. In the meantime, here are some features that can make it easier.

- The most useful feature for keeping track of the other player's plane is the Multi-player Track mode. This always points your view in the direction of the other player's plane. Observing the scenery behind the other plane can help you determine where the other plane is located with respect to your aircraft. If another 3-D window is active and is showing the view from your cockpit, it will not be too difficult to fly toward the other plane when it gets far out of range. Exciting views can be generated in Track mode when flying by and around the other plane.
- It is helpful to agree to fly within a relatively small area with recognizable landmarks. For example, the Chicago database contains the John Hancock Building and the Sears Tower, two large buildings that are easy to locate from the air. If flying is kept within this area, it will always be easy to find the other plane, particularly by using these landmarks as a guide. You can send messages telling where you are and what you're doing to help the other player find you. The map display can be helpful in locating landmarks if you get too far away.
- One problem in finding the other plane is that, in addition to being in any direction around you, he might also be at any altitude above or below you. By having both players enable autopilot and set altitude lock to the same level, the autopilot will do a good job of maintaining a fairly steady altitude, as long as you don't get too aerobatic. Then you can concentrate on looking left and right to find the other player. It can also be useful to bank fairly hard, fly in a circle, and look for the other plane to come into view. Zooming way out on the cockpit display can also be helpful.
- Slew mode and Position Set can be useful in bringing your planes together, both initially and when they stray too far apart. If you get too far ahead of the other player, pause (P) your simulation for a bit to let him catch up. You might also want to disable crash detection, because it is easy to get so wrapped up in searching for your partner that you forget about the location of your own aircraft.

Once you are adept at finding each other in a local area, it shouldn't be too hard to stay in contact in a wide open area on a cross-country flight. The view direction keys can be used to keep the other plane in sight, much as a passenger on a plane would turn his head to view the scenery as it passes by. And watching the other plane do aerobatics can be particularly enjoyable, a sort of do-it-yourself airshow!

19 World War I Ace

World War I Ace is a three-dimensional battle game that lets you test your flying skills against those of your computer-controlled enemy. When you play, you go on several bombing runs and engage in numerous dogfights with your enemy. Your goal is to down five enemy aircraft to become a World War I Ace.

Beginning the Game

Choose option 5, World War I Ace, from the Entertainment menu (activated from the Mode menu) to begin your first game. Figure 19.1 shows the battleground. When the game starts, you are positioned on the runway of Friendly Base 1. This is your main airbase. You are fueled, armed, and ready for takeoff.

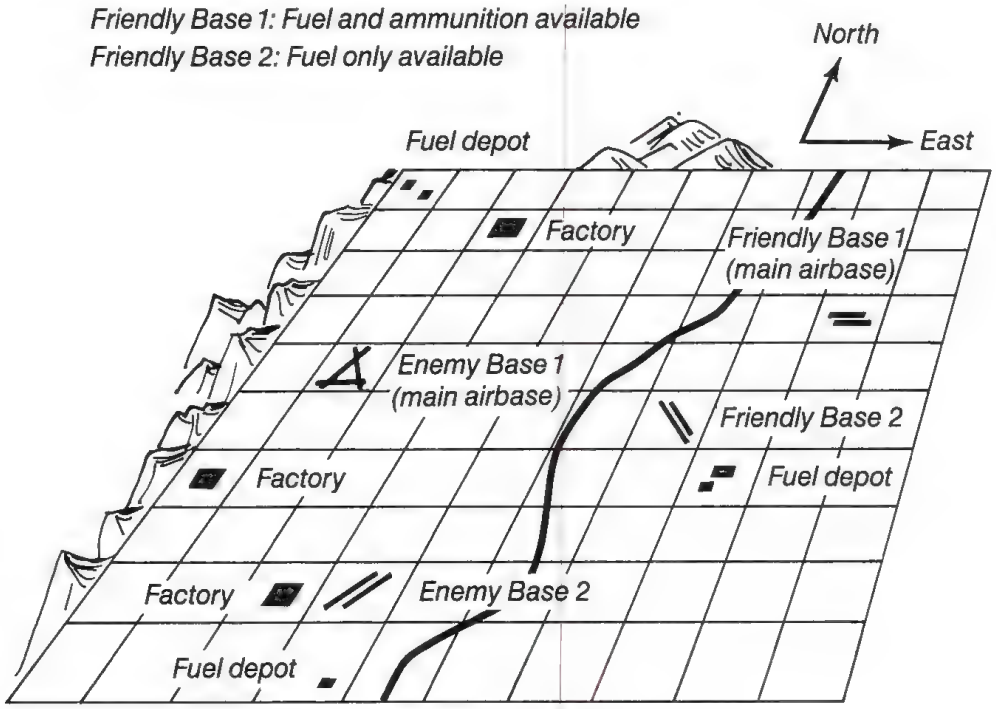

19.1 World War I Ace Battleground

Declaring War

A truce is in effect when you begin the game. The battle will not begin until you declare war by pressing W, the War key.

The enemy occupies the territory west of the river. They have established two airbases, a fuel depot for each, and several factories. Six enemy fighters stand ready to protect the fuel depots and the factories. It is your mission to shoot down as many of the enemy fighters as possible and bomb the depots and factories.

To locate your targets, you have to use the View Direction keys. The downward view includes a bombsight. The bombsight helps direct you over your target so you have a better chance of scoring a hit. Press X to release one bomb.

Becoming an Ace

To become an ace, you must down at least five enemy aircraft. You can earn additional points for other actions.

Action	Points
Downing an enemy aircraft	1
Bombing a factory	4
Destroying a fuel depot	2

These extra points won't make you an ace, but they will indicate your skill as a fighter. Your score is displayed on the attack radar screen.

War Report

Press R, the Report key, to stop the simulation for a moment and display the War Report. It indicates your present status. Press R again to return to the game.

The Enemy

The enemy pilots have orders to intercept any invader. However, each pilot has different instructions for when to launch and when to return to base. The skills of your opponents vary. The enemy aces are proficient and score quickly. Their lesser-skilled compatriots are less likely to hit you.

The enemy flies a wide variety of fighter aircraft. Their fleet contains two planes that are fast and rugged, but equipped with unreliable guns; one plane that is fast and easily maneuvered; one that is a fair fighter, capable of medium-range speed, maneuvered fairly easily, and equipped with average guns; and two super fighters. Be assured that the enemy aces will be in the best planes.

Radar and Instruments

Although World War I aircraft were not equipped with radar, it is implemented in the game. This compensates for the viewing limitations of the three-dimensional screen.

An attack radar screen automatically appears in the window above the instrument panel. The attack radar screen displays your score, as well as various messages about war occurrences. It also has a bomb indicator and an ammunition indicator, which display your current bomb and ammunition supply.

The small plane in the center of the radar screen shows your position and orientation. Enemy aircraft are represented by dots on the screen.

The radar has a radius of approximately one mile and displays the enemy positions when the forward view is selected.

When you play the World War I Ace game, the regular instrument panel is augmented with fighter aircraft instrumentation. The mouse or joysticks can be used to control the yoke, flap, rudder, and throttle performance in the same manner as in regular flight mode. In addition, the SPACEBAR controls gunfire, X releases a bomb, R displays the War Report, and W begins the war.

Strategy and Tactics

First, scout the enemy's territory. Decide where you want to be when the battle begins. You do not have to be at your airbase to declare war. In fact, you will probably find it to your advantage to begin elsewhere.

After you declare war, watch the radar screen and look out the windshield for the approach of the enemy. Move as close to an enemy plane as possible and fire by repeatedly pressing the SPACEBAR. You have a better than average chance of hitting your enemy if the enemy is anywhere on the screen and within range of your gun. Your gun has excellent straight range, but poor side range. Consequently, you must be very close to a plane to hit it when it moves to the sides of the screen.

You, too, are open for attack. Although the enemy can and will shoot you down, every firing does not register a hit for them. Each enemy pilot's success depends on his skill level. Every hit the enemy scores reduces the efficiency of your plane. If you are hit and your aircraft has been damaged (if it is acting strangely, losing fuel, or dropping oil pressure), return to base for repairs and refueling.

Refueling at Friendly Base 1 automatically replenishes your bomb supply. You can carry only five bombs at a time, so you can destroy a maximum of five targets (fuel depots and factories) per mission. Friendly Base 2 has fuel only, so any time you need more bombs you must return to Friendly Base 1.

Six enemy fighters patrol the skies above the enemy airbases. Their location varies from game to game and during the game. Damaged enemy planes are replaced while you refuel and repair your plane.

Now that you know the rules, declare war. Good luck!

World War I Ace Control Summary

Key	Function
W	Declare war
X	Drop bomb
R	Display war report
SPACEBAR	Fire machine guns

Reference to Flight Simulator

Airport Directory . . . 153
Airport Runway Maps . . . 159
Appendix A Performance Specs . . . 175
Appendix B Using a Mouse or Joysticks . . . 177
Appendix C Keyboard Summary . . . 183
Glossary . . . 187

Reference to Flight Simulator

This part of the manual includes the Airport Directory and Airport Runway Maps. Following the maps are three appendixes:

Appendix A, "Performance Specs," gives you the performance specifications for the Cessna Turbo Skylane RG II and the Gates Learjet 25G.

Appendix B, "Using a Mouse or Joysticks," includes instructions for setting up a mouse or joysticks, plus information about use, calibration, and sensitivity controls.

Appendix C, "Keyboard Summary," is a list of all keyboard functions used to control your airplane.

A glossary of important words or terms used throughout this manual is included after the appendixes.

Airport Directory

New York and Boston Area

City	Airport	North	East	Alt.	Fuel	ILS (Rwy/Freq.)
Block Island	Block Island State	17352	21749	105	*	
Boston	General Edward Lawrence Logan Intl.	17899	21853	20	*	
Bridgeport	Igor I. Sikorsky Memorial	17287	21249	10	*	
Chester	Chester	17404	21434	416		
Danbury	Danbury Municipal	17360	21120	457		
Danielson	Danielson	17617	21607	239		
Farmingdale	Republic	17089	21177	81		
Hartford	Hartford-Brainard	17551	21371	19		
Islip	Long Island MacArthur	17132	21278	99		
Martha's Vineyard	Martha's Vineyard	17490	22043	68	*	24/108.7
Meriden	Meriden Markham Municipal	17447	21327	102		
New Haven	Tweed-New Haven	17339	21322	13		
New York	John F. Kennedy Intl.	17034	21065	12	*	
New York	LaGuardia	17091	21026	22		
Oxford	Waterbury-Oxford	17422	21229	727		
Southbridge	Southbridge Municipal	17733	21543	697		
White Plains	Westchester Co.	17226	21065	439		
Willimantic	Windham	17573	21521	246		
Windsor Locks	Bradley Intl.	17638	21351	174		

North and east coordinates are canted at $+10°$ (clockwise) to compensate for orthogonal coordinate grid overlaid on Lambert conformal conic projection.

Chicago Area

City	Airport	North	East	Alt.	Fuel	ILS (Rwy/Freq.)
Aurora	Aurora Municipal	17152	16393	706		
Bloomington	Bloomington-Normal	16593	16246	875		
Champaign (Urbana)	University of Illinois Willard	16400	16465	754	*	31/109.1
Chicago	Chicago Midway	17156	16628	619	*	
Chicago	Chicago-O'Hare Intl.	17243	16578	667	*	
Chicago	Lansing Municipal	17049	16697	614		
Chicago	Merrill C. Meigs	17189	16671	592	*	
Chicago/Blue Island	Howel	17100	16627	600		
Chicago/ Schaumburg	Schaumburg Air Park	17247	16515	795		
Chicago (West Chicago)	DuPage	17213	16466	757		
Danville	Vermilion Co.	16471	16685	695		
Dwight	Dwight	16874	16404	630		
Frankfort	Frankfort	17025	16596	775		
Gibson City	Gibson City Municipal	16594	16461	759		
Joliet	Joliet Park District	17038	16490	582		
Kankakee	Greater Kankakee	16846	16597	625	*	
Monee	Sanger	16980	16646	786		
Morris	Morris Municipal	17004	16413	588		
New Lenox	New Lenox-Howell	17025	16571	745		
Paxton	Paxton	16578	16507	780		
Plainfield	Clow Intl.	17116	16502	670		
Romeoville	Lewis University	17081	16518	672		
Urbana	Frasca Field	16448	16482	735		

North and east coordinates align with orthogonal coordinate grid overlaid on Lambert conformal conic projection.

Seattle Area

City	Airport	North	East	Alt.	Fuel	ILS (Rwy/Freq.)
Alderwood Manor	Martha Lake	21502	6670	500		
Arlington	Arlington Municipal	21616	6737	137		
Auburn	Auburn Municipal	21290	6586	57		
Bremerton	Bremerton National	21407	6470	481		
Everett	Snohomish Co.	21525	6665	603	*	16/109.3
Issaquah	Issaquah	21362	6668	500	*	
Monroe	Flying F. Ranch	21481	6738	50		
Olympia	Olympia	21218	6343	206	*	
Puyallup	Pierce Co.-Thun Fld.	21206	6534	530		
Port Angeles	William R. Fairchild Intl.	21740	6375	288	*	
Port Orchard	Port Orchard	21373	6483	370		
Renton	Renton Municipal	21351	6612	29		
Seattle	Boeing Fld./King Co. Intl.	21376	6596	17	*	
Seattle	Seattle-Tacoma Intl.	21343	6584	429	*	
Shelton	Sanderson Fld.	21353	6316	278		
Snohomish Co. (Paine Field)	see Everett					
Snohomish	Harvey Fld.	21505	6711	16		
Spanaway	Shady Acres	21201	6501	425		
Spanaway	Spanaway	21215	6491	385		
Tacoma	Tacoma Narrows	21300	6480	292		

North and east coordinates are canted at $-21°$ (counterclockwise) to compensate for orthogonal coordinate grid overlaid on Lambert conformal conic projection.

Los Angeles Area

City	Airport	North	East	Alt.	Fuel	ILS (Rwy/Freq.)
Avalon	Catalina (PVT)	15149	5744	1602	*	
Carlsbad	McClennan-Palomar	14931	6112	328		
Chino	Chino	15319	6079	650		
Compton	Compton	15334	5859	97		
Corona	Corona Municipal	15280	6083	533		
El Monte	El Monte	15397	5952	296		
Fallbrook	Fallbrook Community Airpark	15023	6144	708		
Hawthorne	Hawthorne Municipal	15358	5831	63		
Huntington Beach	Meadowlark	15244	5911	28		
LaVerne	Brackett Fld.	15378	6038	1011		
Los Angeles	Hughes (PVT)	15386	5808	22	*	
Los Angeles	Los Angeles Intl.	15374	5805	126	*	
Oceanside	Oceanside Municipal	14974	6095	28		
Ontario	Ontario Intl.	15347	6099	952		
Riverside	Riverside Municipal	15288	6141	816		
San Diego	San Diego Intl.- Lindbergh Fld.	14761	6102	15	*	
Santa Ana	John Wayne Airport/Orange Co.	15211	5961	54	*	
Santa Monica	Santa Monica Municipal	15402	5799	175	*	
Torrance	Torrance Municipal	15308	5815	101		
Van Nuys	Van Nuys	15498	5811	799	*	16R/111.3

North and east coordinates are canted at $-19°$ (counterclockwise) to compensate for orthogonal coordinate grid overlaid on Lambert conformal conic projection.

San Francisco Area

City	Airport	North	East	Alt.	Fuel	ILS (Rwy/Freq.)
Chico	Chico	18158	5567	239		
Columbia	Columbia	17269	5753	2116		
Concord	Buchanan	17452	5221	23		
Fresno	Chandler Downtown	16671	5752	279		
Fresno	Fresno Air Terminal	16679	5795	331		
Garberville	Garberville	18514	5010	544		
Little River	Mendocino Co.	18174	4895	571		
Livermore	Livermore	17302	5251	397		
Lodi	Kingdon	17408	5460	16		
Lodi	Lodi	17447	5503	59		
Marysville	Yuba Co.	17840	5550	62		
Merced	Merced	16980	5608	154		
Minden	Douglas Co.	17584	6104	4717		
Modesto	Modesto City	17172	5518	98		
Monterey Peninsula	Monterey Peninsula	16862	5069	243		
Napa	Napa Co.	17571	5187	33		
Oakland	Metro Oakland Intl.	17367	5129	7	*	11/111.9
Oroville	Oroville	18003	5592	200		
Placerville	Placerville	17591	5748	2585		
Porterville	Porterville	16294	5898	443		
Red Bluff	Red Bluff	18347	5500	348		
Reno	Cannon	17788	6176	4412		
Reno	Stead	17875	6169	5045		
Sacramento	Sacramento Metro	17681	5477	23	*	
Sacramento	Sacramento Exec.	17595	5482	23		
Salinas	Salinas	16856	5161	85		
San Francisco	San Francisco Intl.	17340	5061	10	*	
San Jose	Reid-Hillview	17158	5194	134		
San Jose	San Jose	17184	5165	56	*	
Santa Rosa	Sonoma Co.	17756	5066	125		
Santa Rosa	Santa Rosa	17711	5066	98		
South Lake Tahoe	Lake Tahoe	17570	6016	6265		
Stockton	Stockton Metro	17312	5467	30		
Truckee-Tahoe	Truckee-Tahoe	17761	6031	5901		
Visalia	Visalia	16454	5831	292		
Watsonville	Watsonville	16995	5138	161		
Willows	Glenn Co.	18087	5409	138		

North and east coordinates are canted at −20° (counterclockwise) to compensate for orthogonal coordinate grid overlaid on Lambert conformal conic projection.

Airport Runway Maps

The following maps give you specific runway information for 23 airports. Each map gives the name of the airport, its elevation and coordinates, as well as its ATIS or CT frequencies. Each runway's number and dimensions (length by width) are also provided.

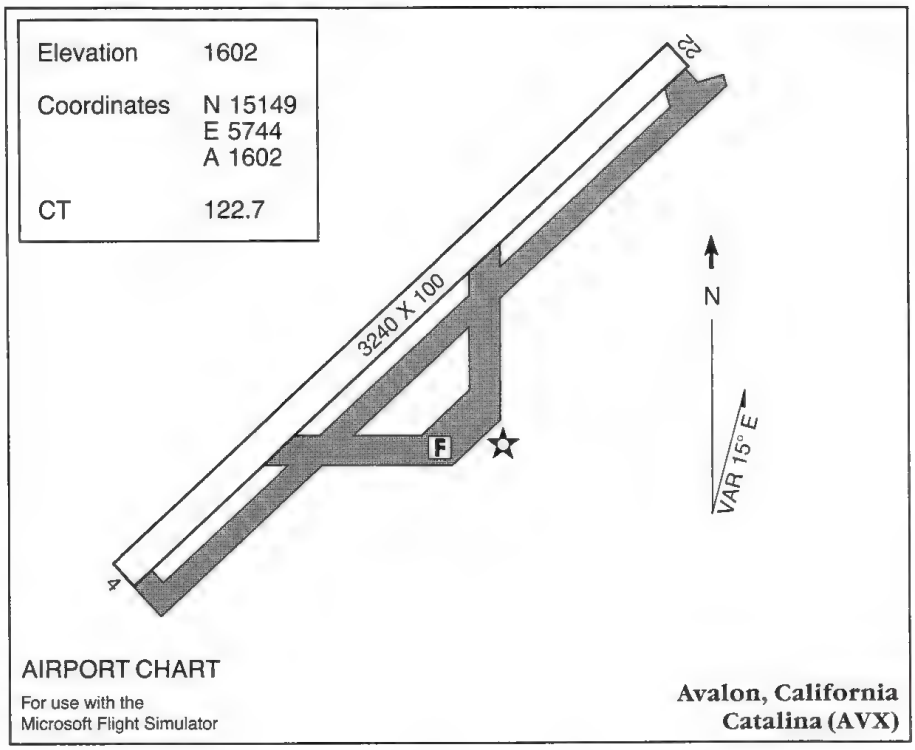

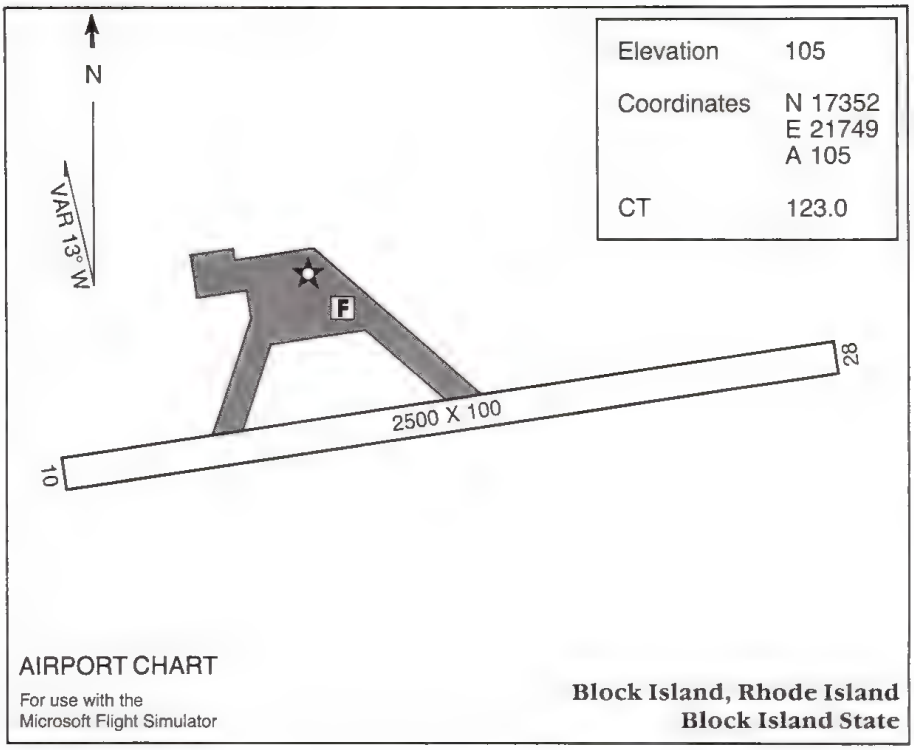

AIRPORT CHART

For use with the
Microsoft Flight Simulator

Block Island, Rhode Island
Block Island State

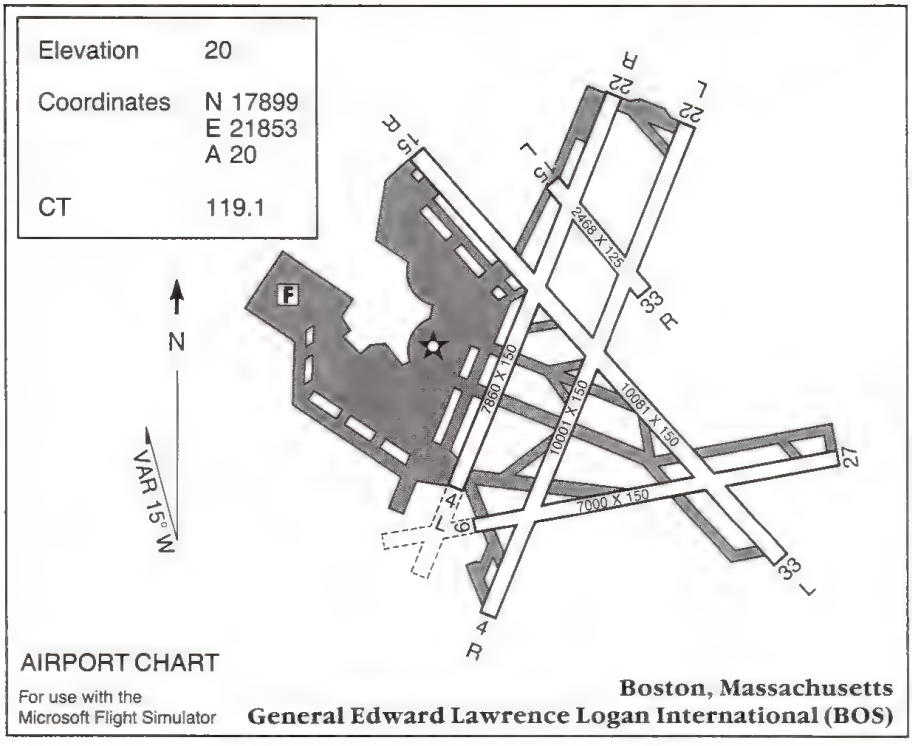

AIRPORT CHART

For use with the
Microsoft Flight Simulator

Boston, Massachusetts
General Edward Lawrence Logan International (BOS)

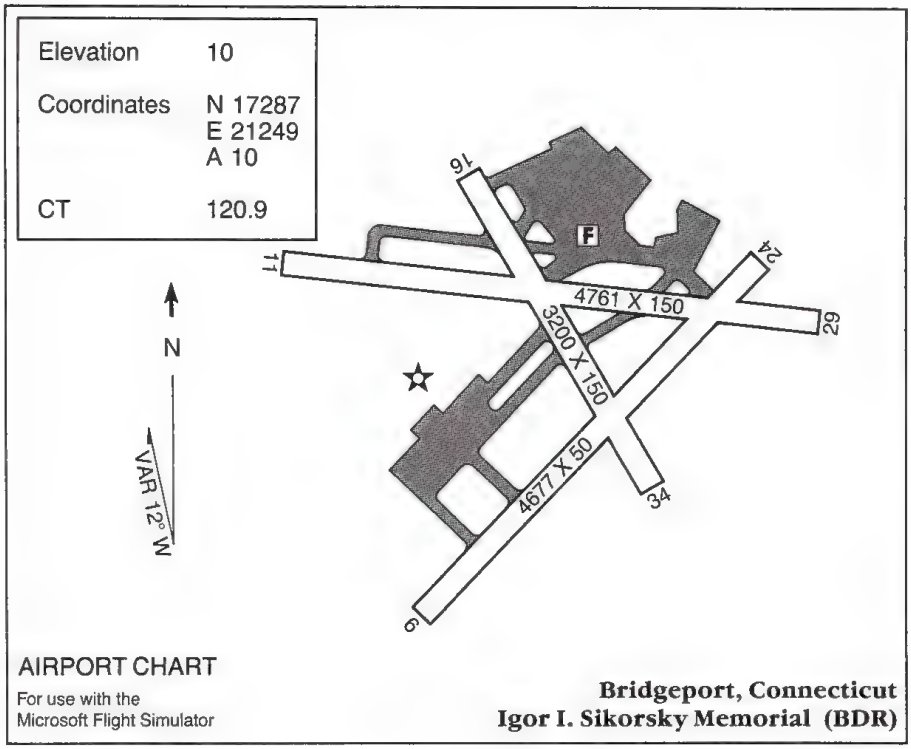
Elevation 10
Coordinates N 17287
E 21249
A 10
CT 120.9
N
VAR 12° W
16
11
F
24
29
4761 X 150
3200 X 150
4677 X 50
34
6
AIRPORT CHART
For use with the
Microsoft Flight Simulator
Bridgeport, Connecticut
Igor I. Sikorsky Memorial (BDR)

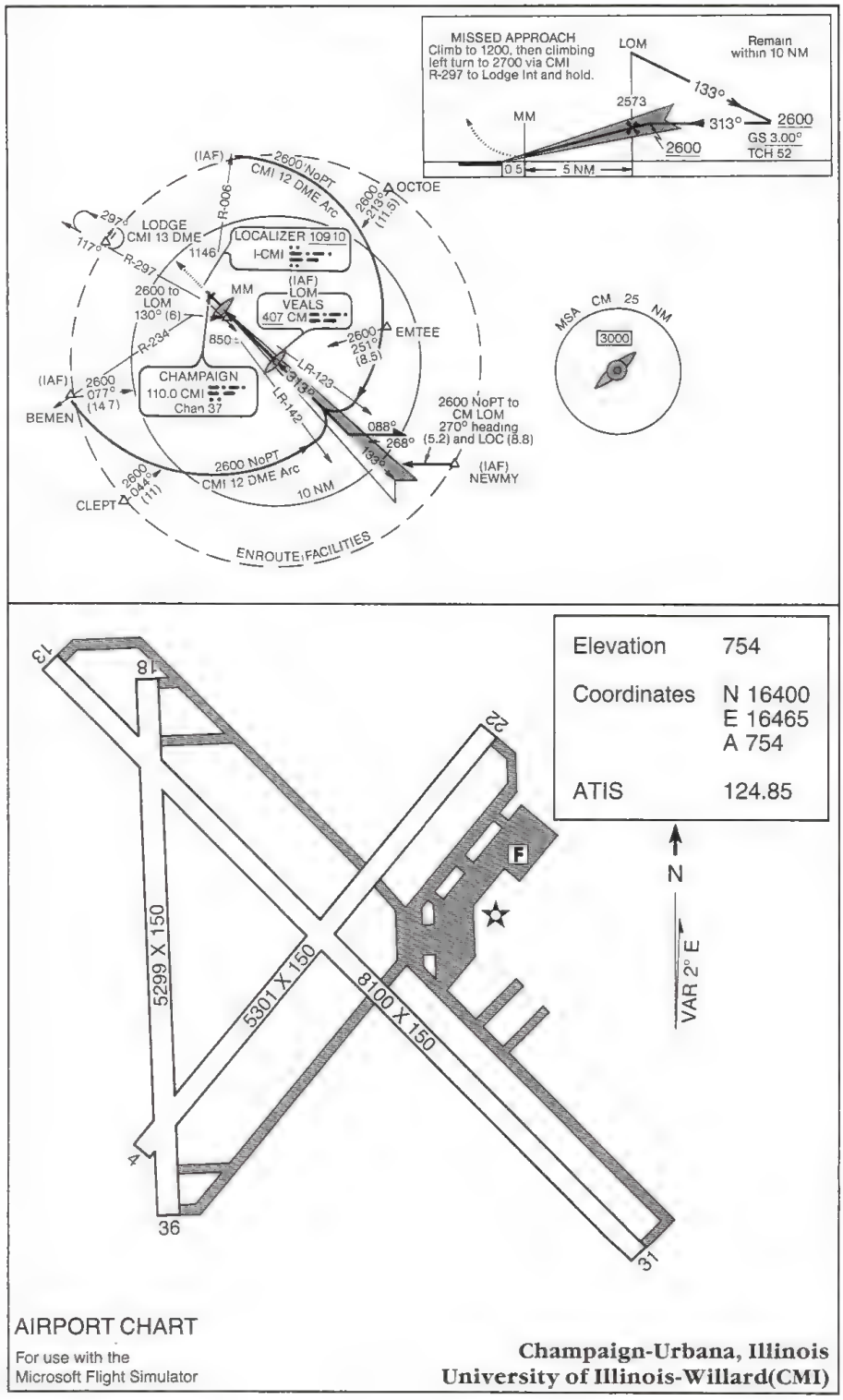
MISSED APPROACH
Climb to 1200, then climbing left turn to 2700 via CMI R-297 to Lodge Int and hold.
LOM
Remain within 10 NM
133°
2573
MM
313°
2600
GS 3.00°
TCH 52
2600
0.5
5 NM
(IAF)
2600 NoPT
CMI 12 DME Arc
OCTOE
2600 213° (11.5)
R-006
297°
117°
LODGE
CMI 13 DME
R-297
1146
LOCALIZER 109.10
I-CMI
(IAF)
LOM
VEALS
407 CM
2600 to LOM 130° (6)
MM
R-234
850
2600 251° (8.5)
EMTEE
LR-123
313°
LR-142
CHAMPAIGN
110.0 CMI
Chan 37
(IAF)
2600 077° (14.7)
BEMEN
088°
268°
1396
2600 NoPT to CM LOM 270° heading (5.2) and LOC (8.8)
(IAF)
NEWMY
2600 NoPT
CMI 12 DME Arc
2600 044° (11)
CLEPT
10 NM
ENROUTE FACILITIES
MSA CM 25 NM
3000
13
18
22
4
36
31
5299 X 150
5301 X 150
8100 X 150
F
N
VAR 2° E
Elevation 754
Coordinates N 16400
E 16465
A 754
ATIS 124.85
AIRPORT CHART
For use with the
Microsoft Flight Simulator
Champaign-Urbana, Illinois
University of Illinois-Willard(CMI)

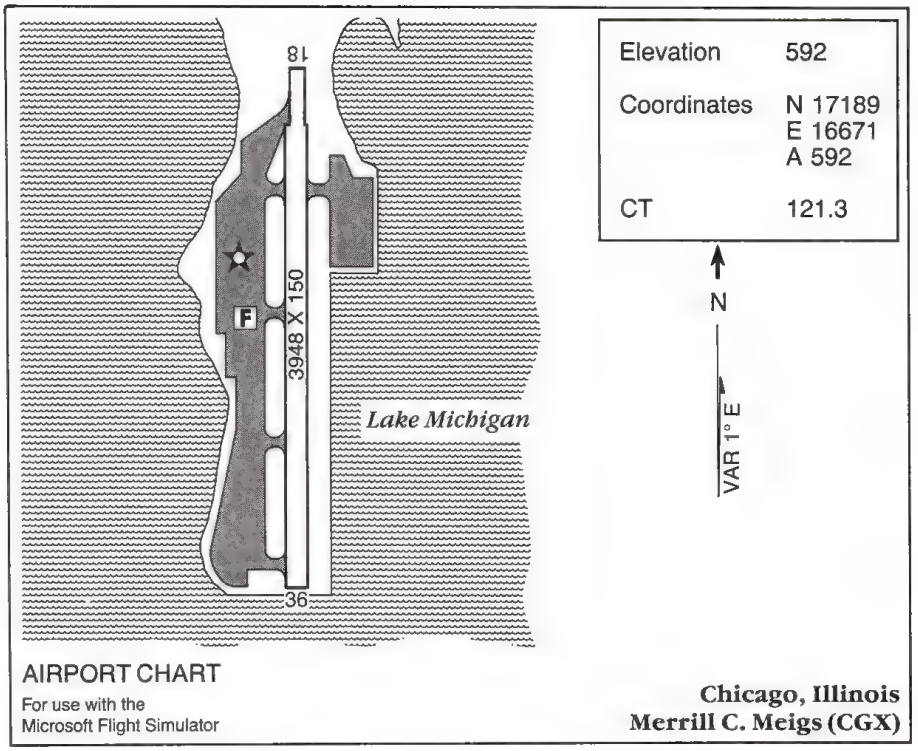
18
F
3948 X 150
Lake Michigan
36
Elevation 592
Coordinates N 17189
E 16671
A 592
CT 121.3
N
VAR 1° E
AIRPORT CHART
For use with the
Microsoft Flight Simulator
Chicago, Illinois
Merrill C. Meigs (CGX)

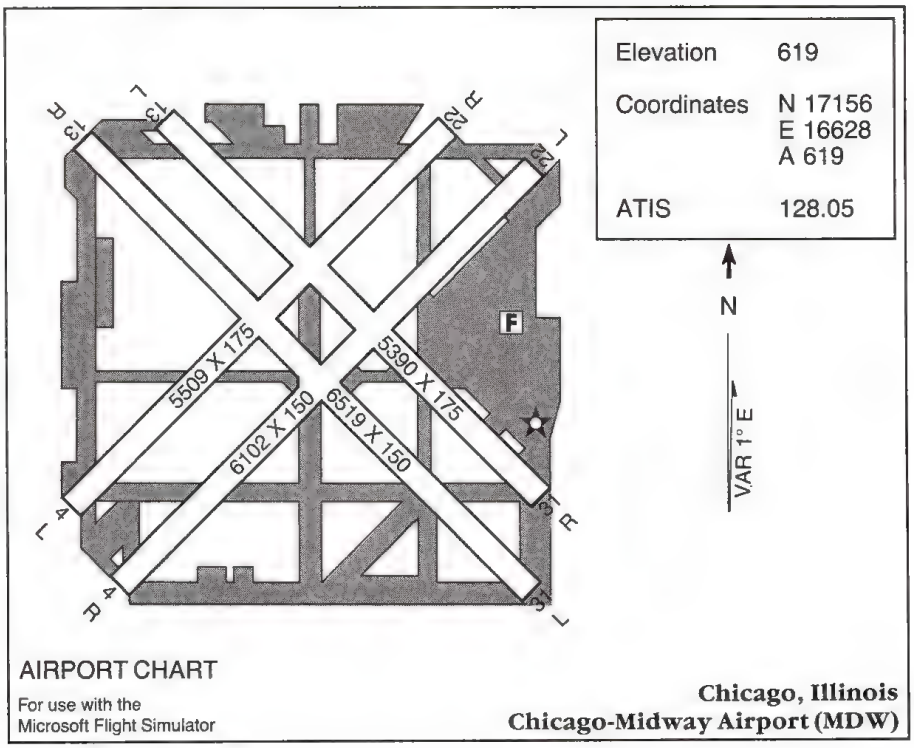
13 R
13 L
22 R
22 L
F
5509 X 175
5390 X 175
6102 X 150
6519 X 150
4 L
4 R
31 R
31 L
Elevation 619
Coordinates N 17156
E 16628
A 619
ATIS 128.05
N
VAR 1° E
AIRPORT CHART
For use with the
Microsoft Flight Simulator
Chicago, Illinois
Chicago-Midway Airport (MDW)

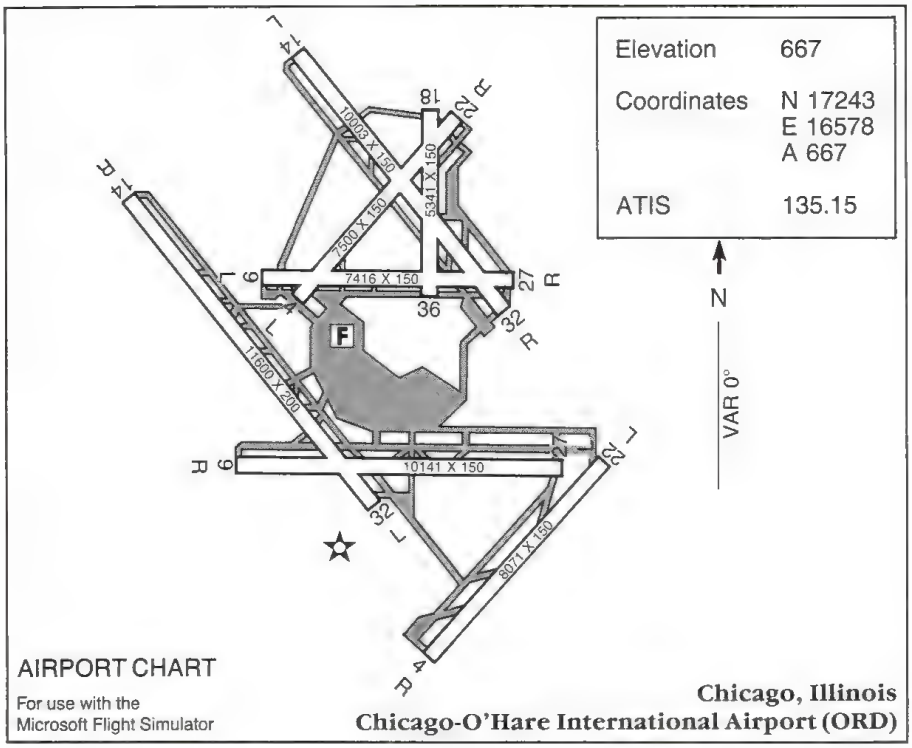
Elevation 667
Coordinates N 17243
E 16578
A 667
ATIS 135.15
N
VAR 0°
14 L
14 R
18
22
10003 X 150
5341 X 150
7500 X 150
7416 X 150
9 L
27 R
36
32 R
F
11600 X 200
9 R
10141 X 150
27 L
22 L
32 L
8071 X 150
4 R
AIRPORT CHART
For use with the
Microsoft Flight Simulator
Chicago, Illinois
Chicago-O'Hare International Airport (ORD)

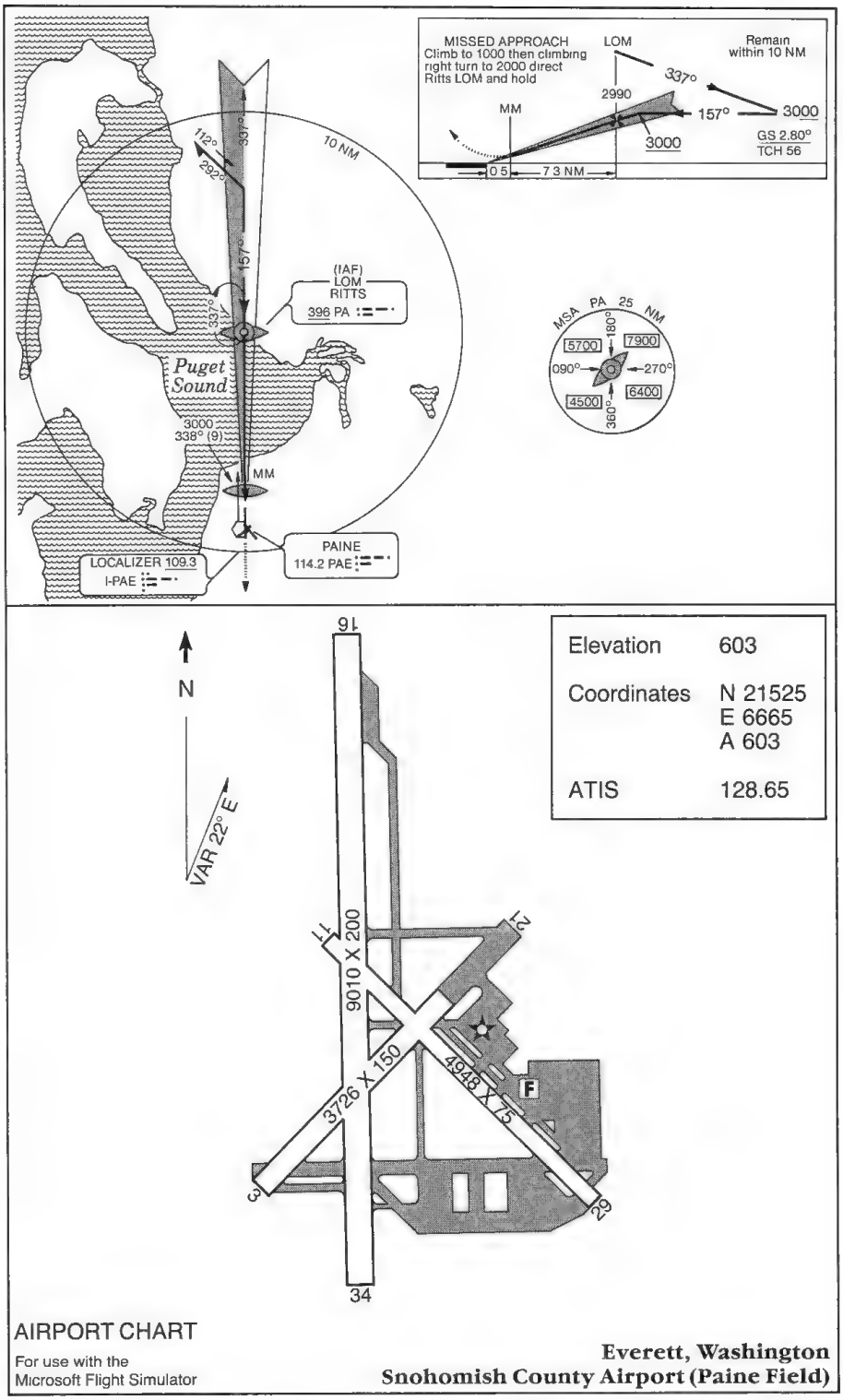
MISSED APPROACH
Climb to 1000 then climbing right turn to 2000 direct Ritts LOM and hold
LOM
Remain within 10 NM
337°
2990
MM
157°
3000
3000
GS 2.80°
TCH 56
0.5
7.3 NM
10 NM
112°
292°
337°
157°
337°
(IAF)
LOM
RITTS
396 PA
Puget Sound
3000
338° (9)
MM
PAINE
114.2 PAE
LOCALIZER 109.3
I-PAE
MSA PA 25 NM
180°
5700
7900
090°
270°
4500
6400
360°
N
VAR 22° E
16
34
11
29
9010 X 200
3726 X 150
4948 X 75
F
Elevation 603
Coordinates N 21525
E 6665
A 603
ATIS 128.65
AIRPORT CHART
For use with the
Microsoft Flight Simulator
Everett, Washington
Snohomish County Airport (Paine Field)

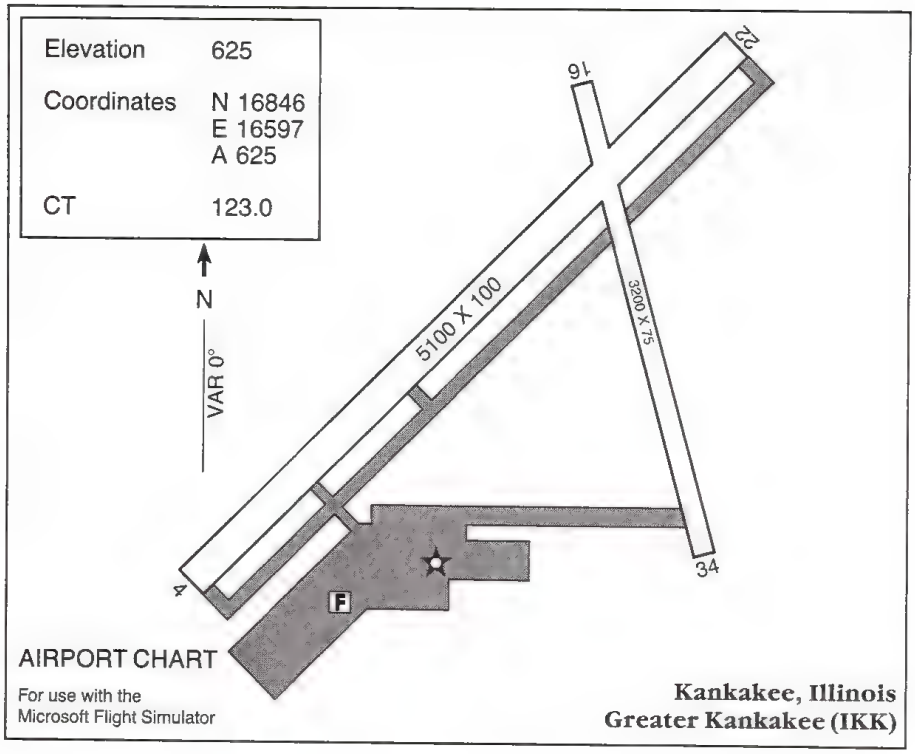
Elevation 625
Coordinates N 16846
E 16597
A 625
CT 123.0
N
VAR 0°
5100 X 100
3200 X 75
16
22
4
34
F
AIRPORT CHART
For use with the
Microsoft Flight Simulator
Kankakee, Illinois
Greater Kankakee (IKK)

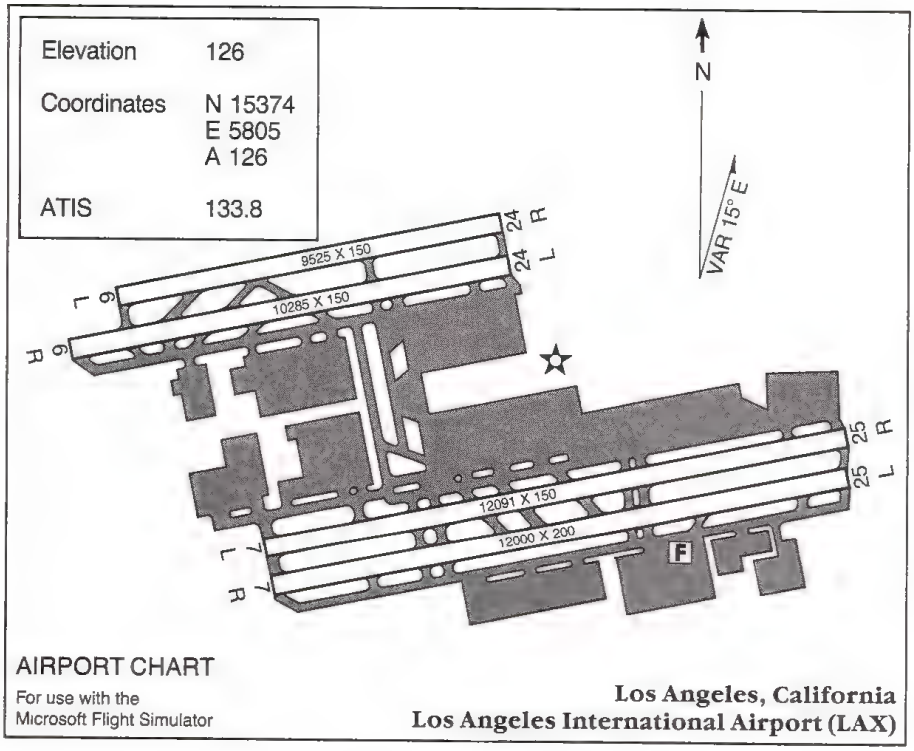
Elevation 126
Coordinates N 15374
E 5805
A 126
ATIS 133.8
N
VAR 15° E
9525 X 150
10285 X 150
24 R
24 L
6 L
6 R
25 R
25 L
12091 X 150
12000 X 200
7 L
7 R
F
AIRPORT CHART
For use with the
Microsoft Flight Simulator
Los Angeles, California
Los Angeles International Airport (LAX)

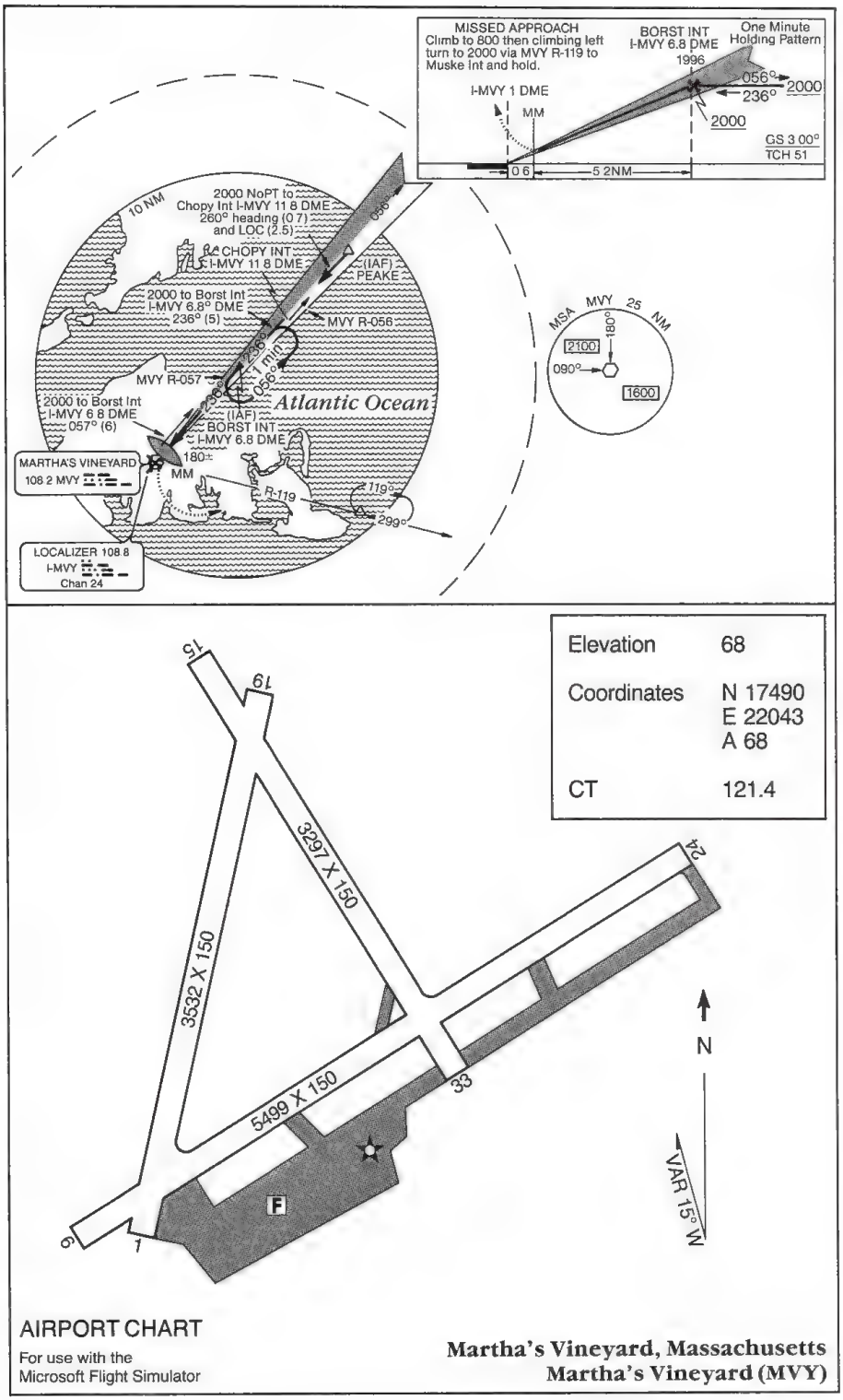
MISSED APPROACH
Climb to 800 then climbing left turn to 2000 via MVY R-119 to Muske Int and hold.
BORST INT
I-MVY 6.8 DME
One Minute Holding Pattern
1996
I-MVY 1 DME
MM
056°
236°
2000
2000
GS 3 00°
TCH 51
0 6
5 2NM
10 NM
2000 NoPT to Chopy Int I-MVY 11 8 DME 260° heading (0 7) and LOC (2.5)
CHOPY INT
I-MVY 11 8 DME
(IAF)
PEAKE
2000 to Borst Int I-MVY 6.8° DME 236° (5)
MVY R-056
MVY R-057
2000 to Borst Int I-MVY 6 8 DME 057° (6)
Atlantic Ocean
(IAF)
BORST INT
I-MVY 6.8 DME
MARTHA'S VINEYARD
108 2 MVY
180±
MM
R-119
119°
299°
LOCALIZER 108 8
I-MVY
Chan 24
MSA
MVY
25 NM
180°
2100
090°
1600
Elevation 68
Coordinates N 17490
E 22043
A 68
CT 121.4
15
19
3297 X 150
24
3532 X 150
5499 X 150
33
9
1
F
N
VAR 15° W
AIRPORT CHART
For use with the
Microsoft Flight Simulator
Martha's Vineyard, Massachusetts
Martha's Vineyard (MVY)

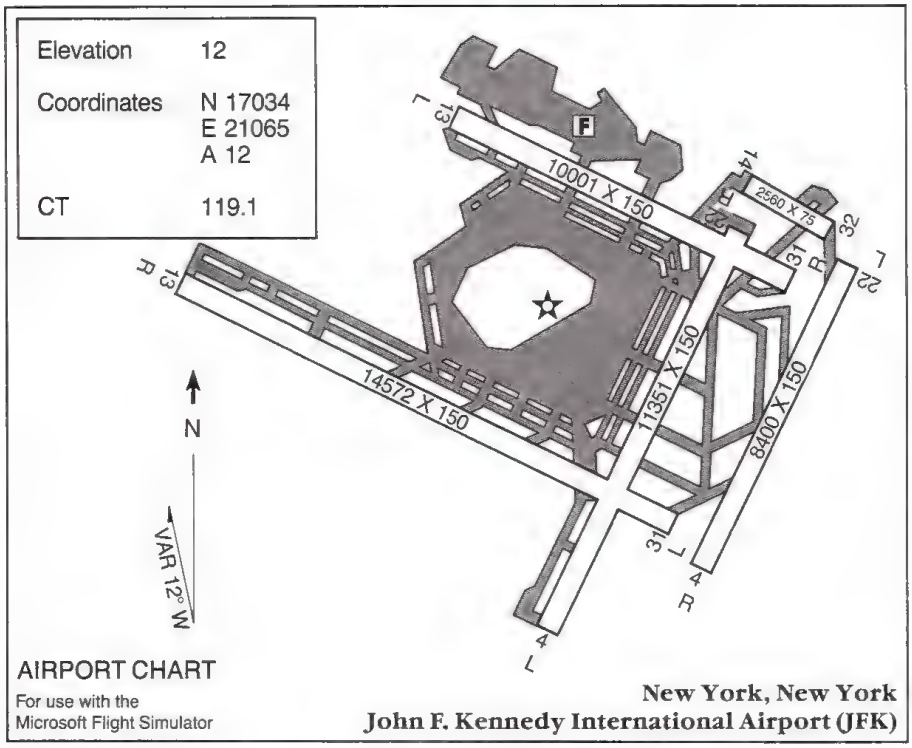
Elevation 12
Coordinates N 17034
E 21065
A 12
CT 119.1
13 L
13 R
10001 X 150
14
22
2560 X 75
32
31 R
22 L
14572 X 150
11351 X 150
8400 X 150
31 L
4 R
4 L
N
VAR 12° W
AIRPORT CHART
For use with the
Microsoft Flight Simulator
New York, New York
John F. Kennedy International Airport (JFK)

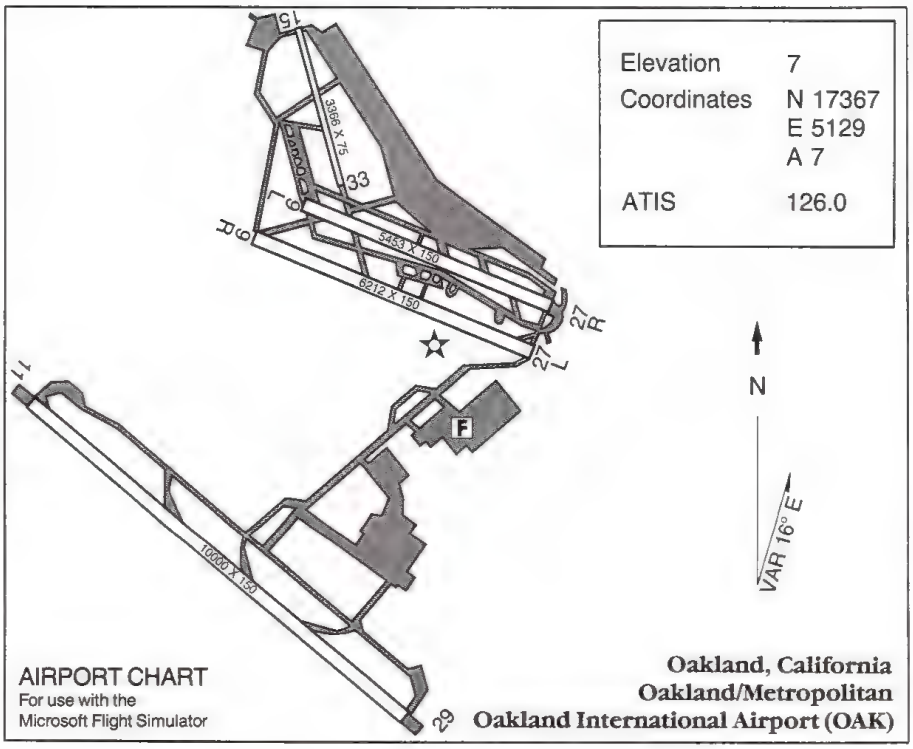
15
3996 X 75
33
9
9 R
5453 X 150
6212 X 150
27 R
27 L
11
29
10000 X 150
Elevation 7
Coordinates N 17367
E 5129
A 7
ATIS 126.0
N
VAR 16° E
AIRPORT CHART
For use with the
Microsoft Flight Simulator
Oakland, California
Oakland/Metropolitan
Oakland International Airport (OAK)

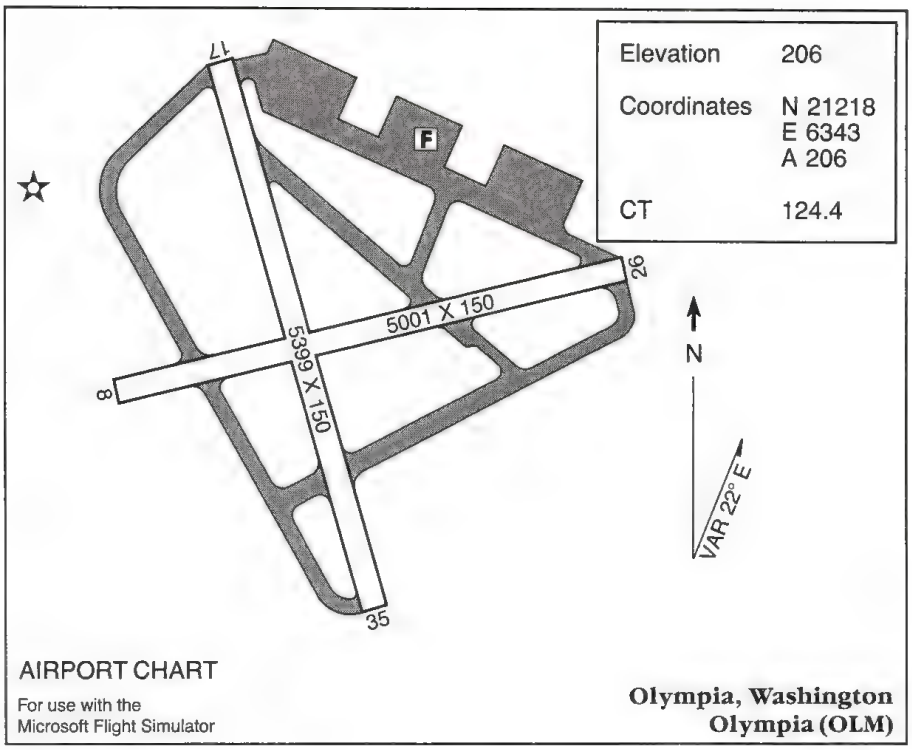

AIRPORT CHART

For use with the
Microsoft Flight Simulator

Olympia, Washington
Olympia (OLM)

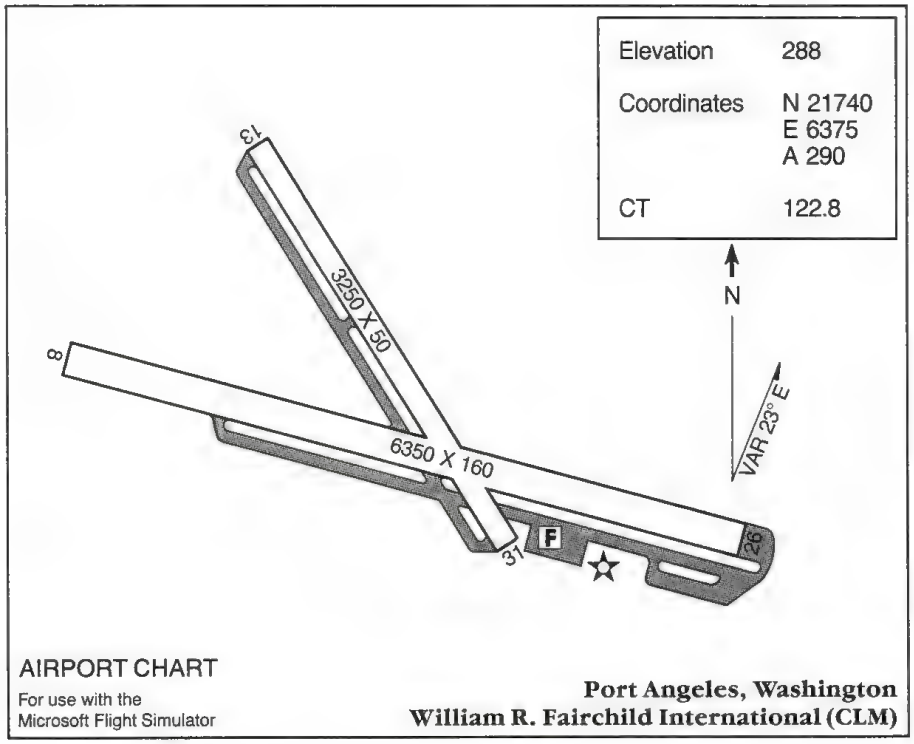

AIRPORT CHART

For use with the
Microsoft Flight Simulator

Port Angeles, Washington
William R. Fairchild International (CLM)

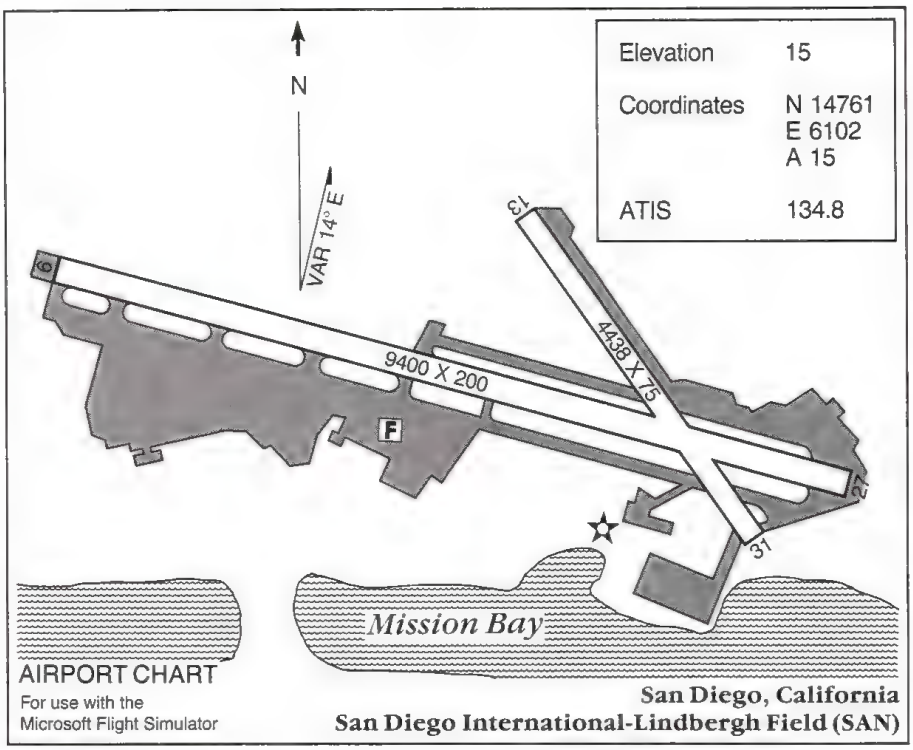
N
VAR 14° E
Elevation 15
Coordinates N 14761
E 6102
A 15
ATIS 134.8
9400 X 200
4438 X 75
13
6
27
31
F
Mission Bay
AIRPORT CHART
For use with the
Microsoft Flight Simulator
San Diego, California
San Diego International-Lindbergh Field (SAN)

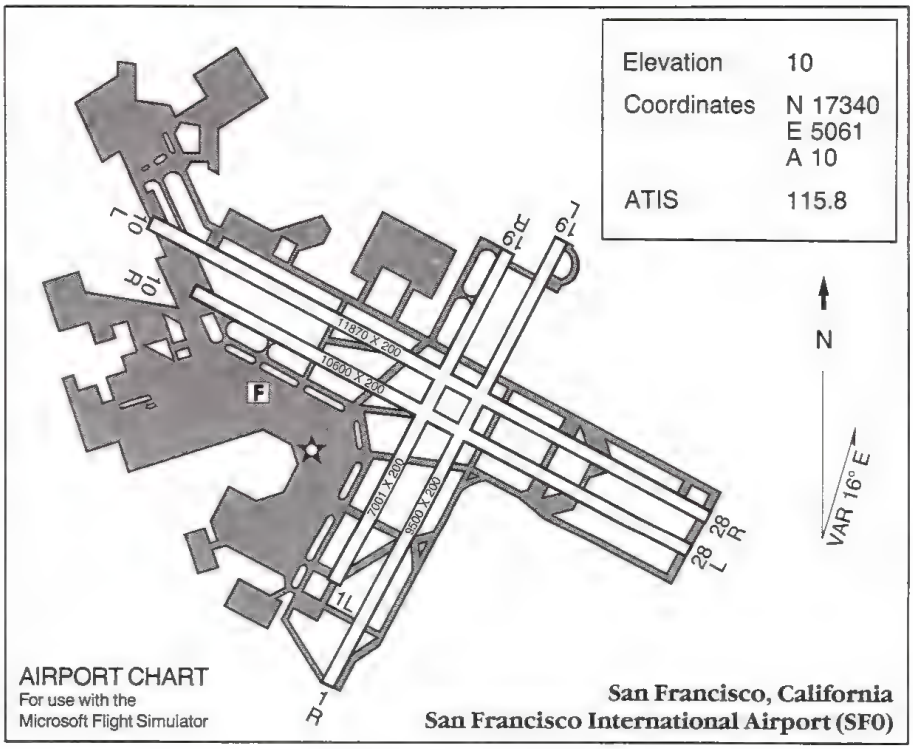
Elevation 10
Coordinates N 17340
E 5061
A 10
ATIS 115.8
N
VAR 16° E
10L
10R
19L
19R
19L
11870 X 200
10600 X 200
7001 X 200
8500 X 200
28L
28R
1R
1L
F
AIRPORT CHART
For use with the
Microsoft Flight Simulator
San Francisco, California
San Francisco International Airport (SF0)

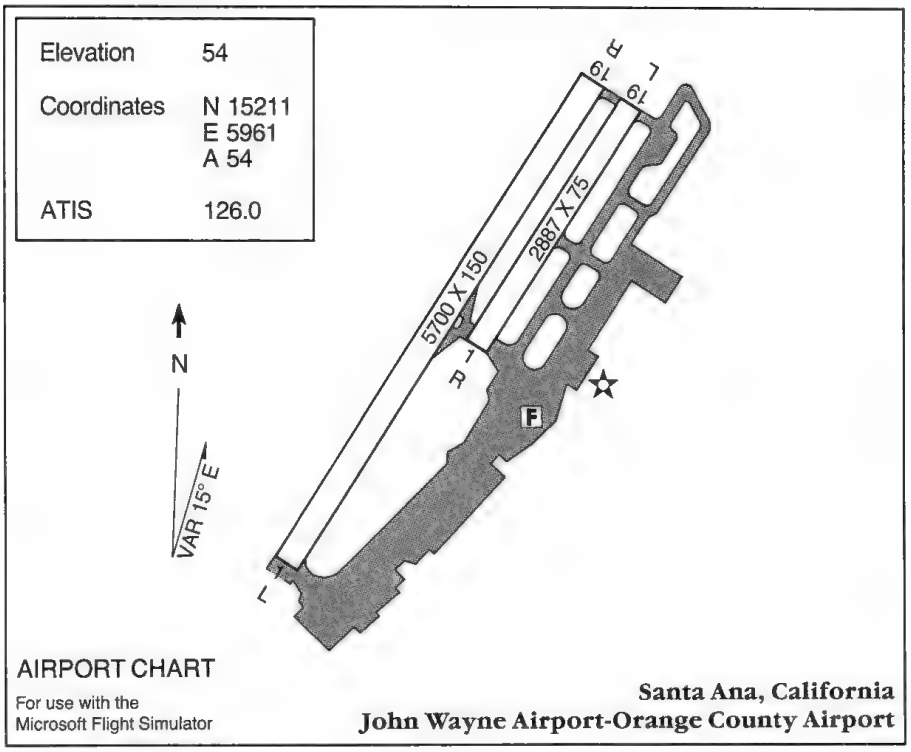
Elevation 54
Coordinates N 15211
E 5961
A 54
ATIS 126.0
N
VAR 15° E
5700 X 150
2887 X 75
19 R
19 L
1 R
1 L
F
AIRPORT CHART
For use with the
Microsoft Flight Simulator
Santa Ana, California
John Wayne Airport-Orange County Airport

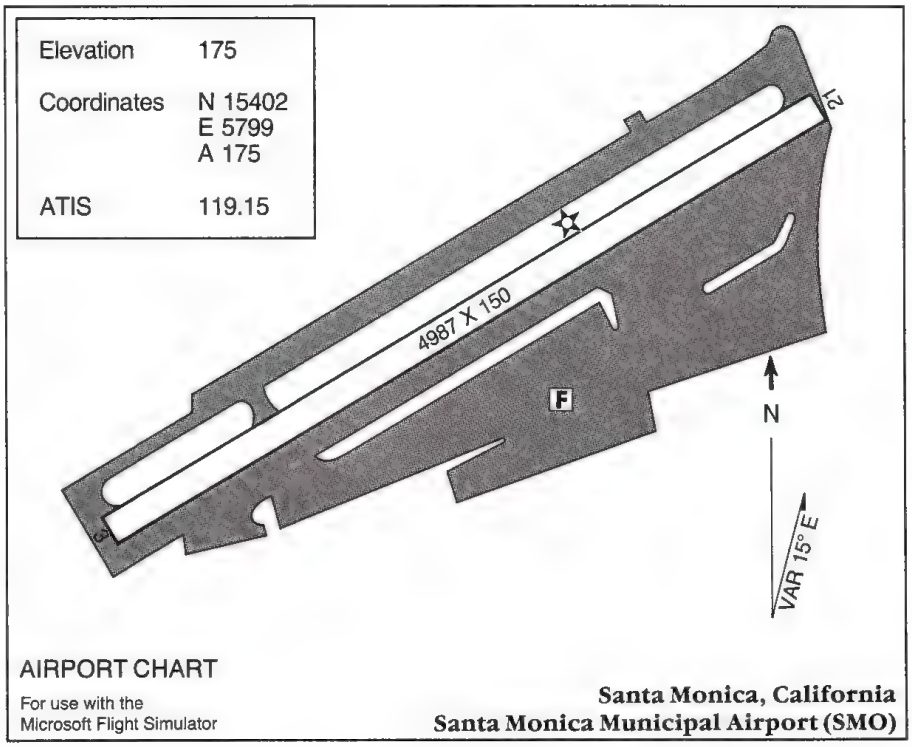
Elevation 175
Coordinates N 15402
E 5799
A 175
ATIS 119.15
21
4987 X 150
F
N
VAR 15° E
AIRPORT CHART
For use with the
Microsoft Flight Simulator
Santa Monica, California
Santa Monica Municipal Airport (SMO)

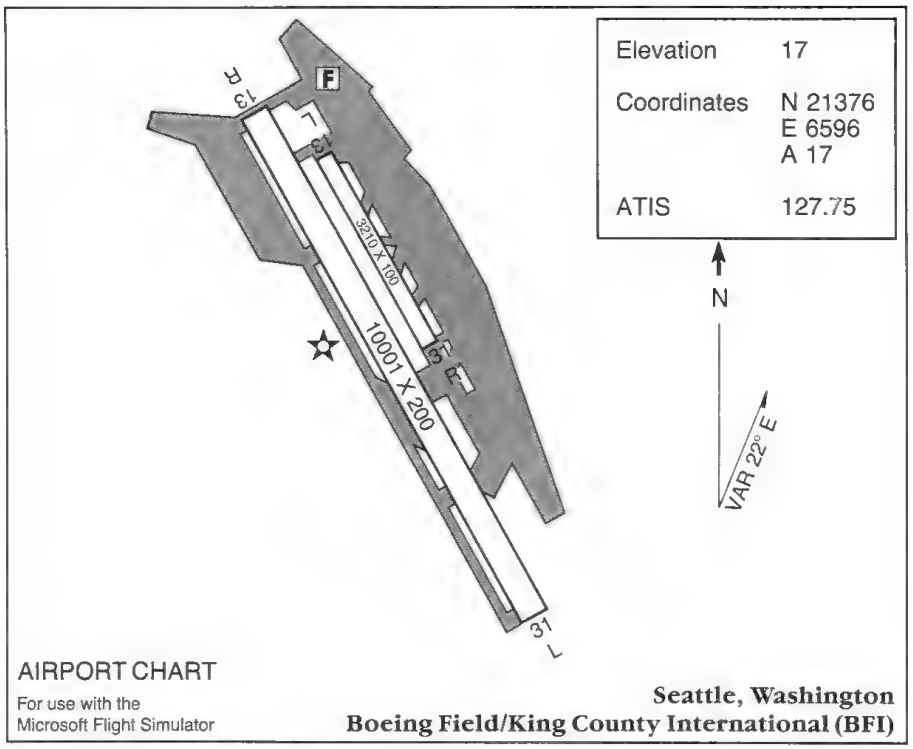
Elevation 17
Coordinates N 21376
E 6596
A 17
ATIS 127.75
N
VAR 22° E
13 R
13 L
F
3210 X 100
10001 X 200
31 R
31 L
AIRPORT CHART
For use with the
Microsoft Flight Simulator
Seattle, Washington
Boeing Field/King County International (BFI)

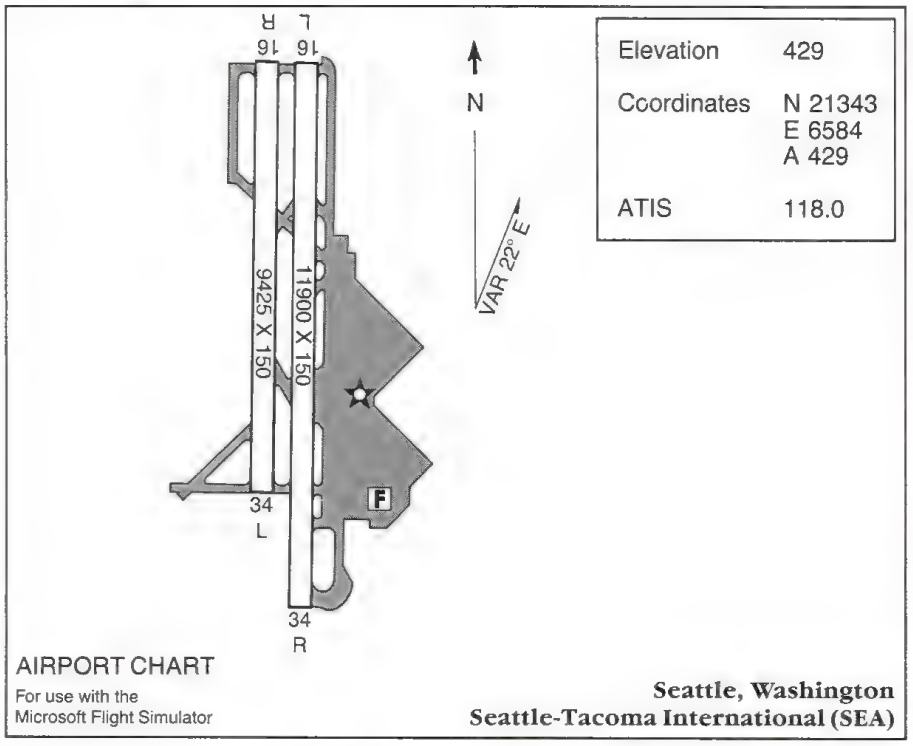
Elevation 429
Coordinates N 21343
E 6584
A 429
ATIS 118.0
N
VAR 22° E
16 R
16 L
9425 X 150
11900 X 150
34 L
34 R
F
AIRPORT CHART
For use with the
Microsoft Flight Simulator
Seattle, Washington
Seattle-Tacoma International (SEA)

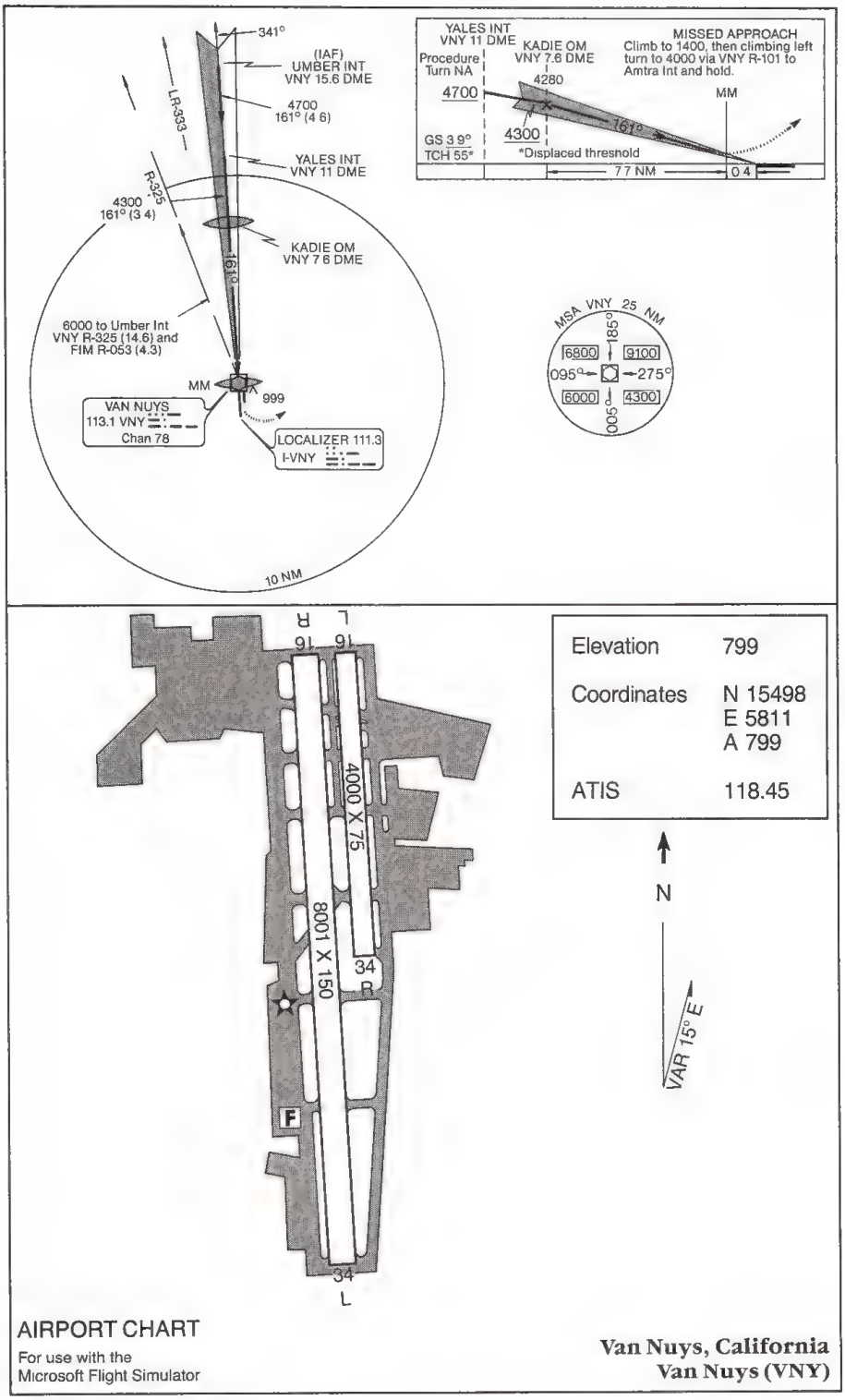
341°
(IAF)
UMBER INT
VNY 15.6 DME
4700
161° (4 6)
YALES INT
VNY 11 DME
KADIE OM
VNY 7 6 DME
LR-333
R-325
4300
161° (3 4)
161°
6000 to Umber Int
VNY R-325 (14.6) and
FIM R-053 (4.3)
MM
999
VAN NUYS
113.1 VNY
Chan 78
LOCALIZER 111.3
I-VNY
10 NM
YALES INT
VNY 11 DME
KADIE OM
VNY 7.6 DME
MISSED APPROACH
Climb to 1400, then climbing left
turn to 4000 via VNY R-101 to
Amtra Int and hold.
Procedure
Turn NA
4700
4280
MM
GS 3 9°
TCH 55*
4300
161°
*Displaced threshold
7 7 NM
0 4
MSA VNY 25 NM
185°
6800
9100
095°
275°
6000
4300
005°
R
L
16
16
4000 X 75
8001 X 150
34
R
F
34
L
Elevation 799
Coordinates N 15498
E 5811
A 799
ATIS 118.45
N
VAR 15° E
AIRPORT CHART
For use with the
Microsoft Flight Simulator
Van Nuys, California
Van Nuys (VNY)

A Performance Specs

Cessna Turbo Skylane RG II Performance Specs

Length	28 feet
Height	9 feet 3 inches
Wingspan	36 feet
Wing Area	174 square feet
Max. takeoff weight	3100 pounds
Empty weight	1752 pounds
Max. useful load	1360 pounds
Max. landing weight	3100 pounds
Wing loading	17.8 pounds per square feet
Power loading	13.2 pounds per horsepower
Max. usable fuel	88 gallons (526 pounds)
Max. rate of climb at sea level	1050 feet per minute
Max. rate of climb at 8000 feet	455 feet per minute
Service ceiling	14900 feet
Max. speed	146 knots
Cruise, 65% power at 8000 feet	133 knots
Endurance at 65% power	7.5 hours
Stall speed clean	54 knots
Stall speed flaps down	49 knots
Turbulent air penetration speed	110 knots
Landing gear	Retractable tricycle, steerable nose-wheel

Gates Learjet 25G Performance Specs

Type designation	LR-25G
Engines	General Electric CJ610-8A, 2,950 pounds each
Seats	10
Length	47.6 feet
Height	12.3 feet
Wingspan	35.6 feet
Wing area	247 square feet
Wing aspect ratio	5.5
Max. ramp weight	16,300 pounds
Max. takeoff weight	16,300 pounds
Standard empty weight	8250 pounds
Empty weight as tested	8616 pounds
Max. useful load	8550 pounds
Zero-fuel weight	11,400 pounds
Max. landing weight	13,700 pounds
Wing loading	66 pounds per square feet
Max. altitude	51,000 feet
Power loading	12.8 pounds per pound
Max. usable fuel	6638 pounds
Max. pressurization differential	9.4 psi
8,000-feet cabin altitude at	51,000 feet
Normal cruise at 45,000 feet	445 knots
High speed cruise at 41,000 feet	464 knots
Fuel flow at normal cruise (as tested)	1370 pph
Stalling speed flaps/gear down	99 knots

B Using a Mouse or Joysticks

A mouse and/or one or two joysticks can be used for flight control functions. This appendix includes instructions for setting up a mouse or joysticks, plus information about use, calibration, and sensitivity controls.

If Joystick A or B is active, it overrides the mouse yoke controls. Mouse pointer functions are still active when joysticks are used.

Using a Mouse

If you plan on using a Microsoft Mouse, read this section. If not, skip this section.

Mouse Setup

To use the mouse, first install the mouse driver. You must be in MS-DOS (or IBM-DOS) to do this. The instructions that came with the Microsoft Mouse show how to install the mouse driver. Follow those instructions.

Once the mouse driver is installed, start Flight Simulator from MS-DOS as usual (by typing *fs*). Answer "Yes" to "Do you want to use the mouse?" If the mouse driver was not installed in DOS, you will get a message saying that no driver was found. You can continue without mouse control, or exit from the simulator, install the mouse driver, and restart the simulator. (If you are familiar with DOS batch files, you may want to set up a batch file to run the mouse install program, then start Flight Simulator.)

When Flight Simulator starts running, a pointer will appear on the screen. Moving the mouse should move the pointer.

Pointer and Yoke Modes

In Flight Simulator, the mouse operates in two modes: Pointer and Control Yoke. Pressing the right mouse button toggles between Pointer and Yoke modes.

Mouse Pointer Mode In Pointer mode, the mouse is used to select menu options, similar to the usual mouse "pointing and clicking" way. A pointer (arrow) moves about the screen, and you can click from menu bars using the left button. Instrument panel functions are also performed in this mode by pointing at instruments (radio knobs and digits, for example) and pressing the left mouse button to adjust them. Generally, clicking the left side of a knob or digit decreases the instrument setting, while clicking the right side advances it. These functions are described in the sections that describe instrument use and adjustments.

Mouse Control Yoke Mode In Control Yoke mode, the mouse acts as the aircraft's control yoke or stick. Figure B.1 shows mouse functions in yoke mode.

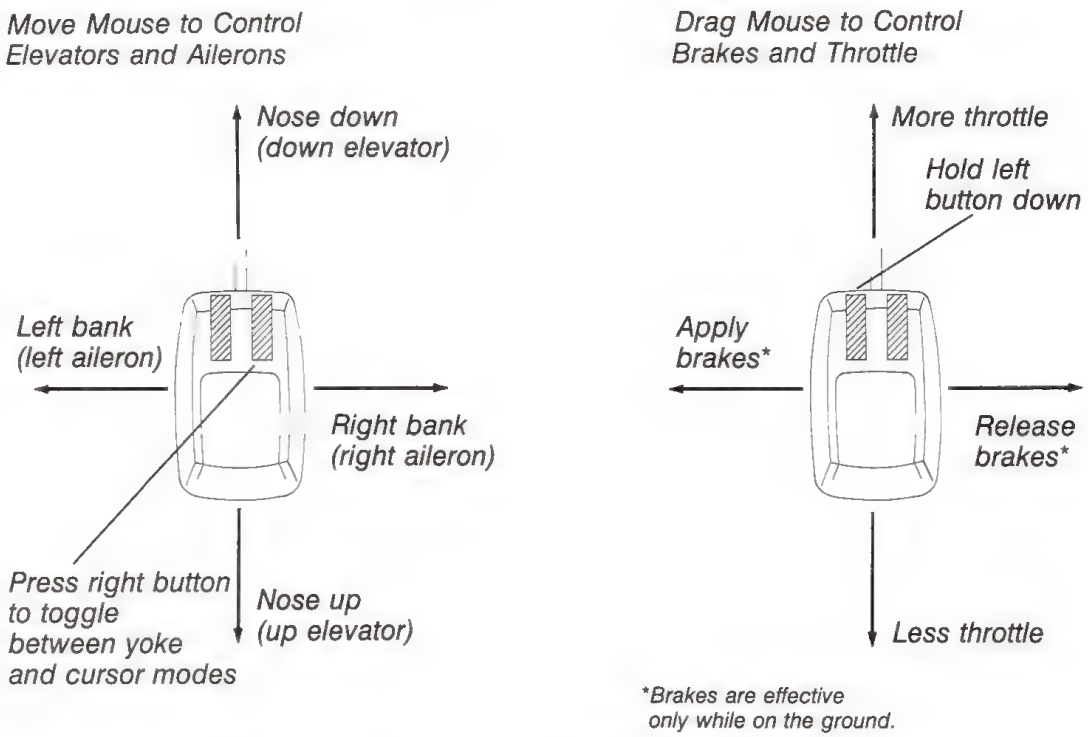

B.1 Mouse Functions in Control Yoke Mode

Movements forward and backward control aircraft pitch (nose up and nose down); left and right movements control bank, which causes you to turn left or right. In Control Yoke mode, the mouse acts as if it were the tip of a large joystick. The elevator and rudder position indicators on the control panel move as the mouse is moved.

Throttle and brakes are also mouse-controlled in Control Yoke mode. Holding the left button down and dragging the mouse forward or backward increases or decreases throttle. Dragging the mouse to the left applies brakes, and dragging to the right releases them. The throttle indicator on the control panel shows throttle movement (engine RPM also changes as you move the throttle), and a brakes indicator near the bottom-center of the 3-D screen indicates that brakes are applied. Brakes are effective only on the ground, and are automatically released when you are in the air so that you won't land with brakes on.

Toggling Between Pointer and Yoke Modes

Pressing the right button on the mouse toggles between Pointer and Yoke modes.

Adjusting Mouse Sensitivity

The mouse control sensitivity is adjustable by selecting option D, Mouse, in the Sim menu. Select the mouse mode (Yoke or Pointer) and direction for which you want to adjust by choosing options 1, 2, or 3. The left-right and up-down arrow symbols next to the option number indicate mouse adjustment direction. Pointer mode sensitivity adjusts for both left-right and up-down sensitivity simultaneously.

After choosing the direction, choose the degree of sensitivity on the bar numbered 1–8 to the right of the direction symbol. The value of 1 is low sensitivity (large mouse movement for slight yoke or pointer movement), and 8 is high sensitivity.

The pointers below the numbered bars show the current setting. You can adjust the pointer to finer values by dragging it (pointing to it, holding the left button down, moving the pointer, and then releasing the button) to the desired position.

After selecting the sensitivity level, press ESCAPE to adjust sensitivity in other directions. The fourth control bar controls the null zone size. A null zone is provided in the center of control movement to keep the plane from slowly drifting into a bank if the ailerons are positioned the slightest bit off-center. As long as the mouse is in this zone, the ailerons are centered. Too wide a null zone gives the ailerons a sloppy feel, while too small a zone makes it too easy to start banking unintentionally. Adjust to a balance between these two conditions. When all sensitivities are adjusted, exit from the Mouse menu by pressing ESCAPE or clicking "Press ESC to Exit."

Using Joysticks

If you plan to use one or two joysticks, read this section. If not, skip this section.

To use joysticks, you need an IBM Game Control Adapter Card (or an equivalent card) and one or two joysticks with buttons. The Game Control Adapter Card supports two joysticks, designated as Joystick A and Joystick B. With Flight Simulator, Joystick A is used to control ailerons and elevators, and Joystick B is used to control the throttle and brakes, or the throttle and rudder.

The IBM Game Control Adapter Card can handle two joysticks simultaneously. Since there is only one socket on the adapter, both joysticks must fit into a single connector. However, since joysticks are seldom sold in pairs, most use a connector designed for a single joystick.

The documentation supplied with your game adapter specifies how to support two joysticks. You (or someone at your computer store) can build a Y-adapter. This splits the single connector into Joystick A and Joystick B sockets, allowing you to connect both joysticks simultaneously.

Note Check with your dealer or the manufacturer of your joystick to see if an adapter has already been made for this purpose.

Joystick Setup

Joysticks are either self-centering (the stick returns to the center position when released) or noncentering. Ailerons and rudder can be controlled with either a noncentering or self-centering joystick.

Note Only noncentering joysticks can be used to control the elevators and the throttle.

Many joysticks have mechanical switching levers to enable or disable the self-centering springs. These switches are usually on the underside of the joystick case.

The ideal setup for Flight Simulator joysticks is:

- Ailerons (Joystick A, X-movement), self-centering
- Elevators (Joystick A, Y-movement), noncentering
- Throttle (Joystick B, Y-movement), noncentering
- Brakes (Joystick B, X-movement), self-centering
- Rudder (alternate Joystick B, X-movement), self-centering

Warning You may be able to disable the self-centering mechanism on joysticks that do not have switching levers. However, check with your joystick manufacturer before attempting any alteration.

Installing Joysticks

1. Turn the computer off and install the Game Control Adapter Card and joystick(s) according to the instructions that accompanied these products.
2. Turn the computer on and start Flight Simulator.
3. Select Sim from the menu bar.
4. Select Joystick from the Sim menu.
5. On the Joystick Calibration menu, select Joystick A (yoke) and/or Joystick B (throttle and brakes). The + next to the selection number indicates that the joystick is active.

   If you prefer Joystick B to be throttle and rudder, select option 3.

Joystick A controls the ailerons and the elevators (and the rudder in auto-coordinated mode). Sideways movement (on the X-axis) controls ailerons and roll, and forward and backward movement (on the Y-axis) controls elevators and nose up and down (see Figure B.2). Slowly move the stick through its complete X and Y range, watching the elevator and aileron (and auto-coordinated rudder) indicators move. The movement may be jumpy, and pushing the stick in a specific direction may not move the ailerons or elevators in that direction, but calibration will solve these problems.

Joystick B controls the throttle and brakes. Full forward provides full throttle, and full back reduces engine speed to an idle (see Figure B.2). Left motion applies brakes; centered and right is brakes off.

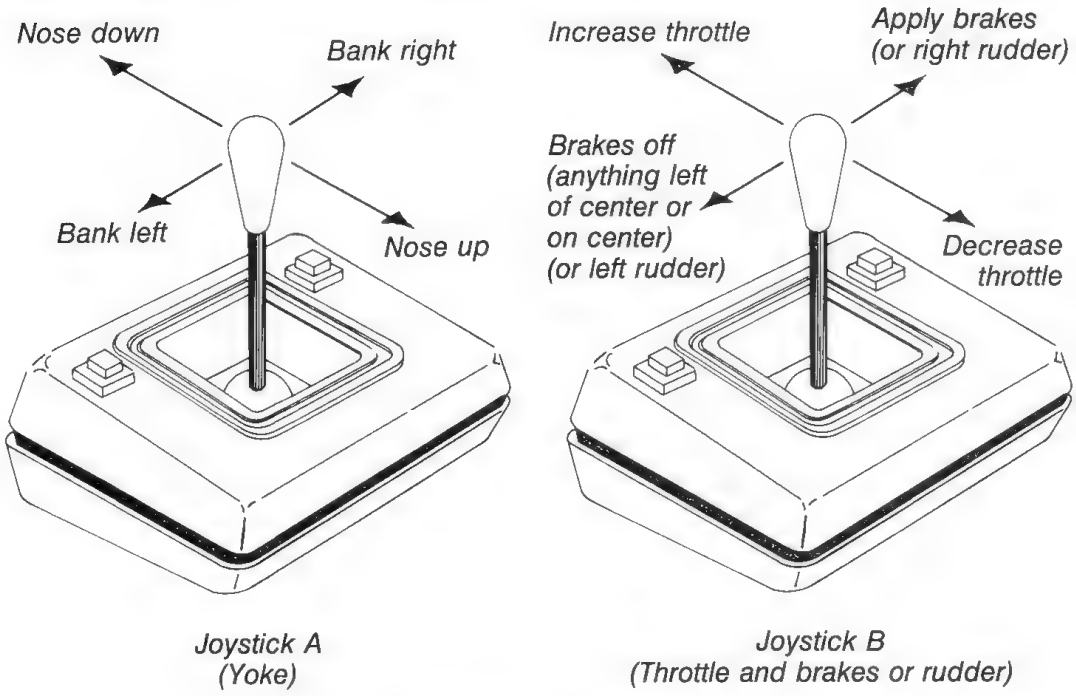

B.2 Joystick Functions

Joystick Calibration

After turning on the joystick(s), you must calibrate them. Joysticks vary greatly from manufacturer to manufacturer. The range of numerical values generated also varies widely. The IBM Game Control Adapter Card specification calls for joysticks with 0–100K-ohm resistance and linear response. Joysticks with these characteristics work best with Flight Simulator.

The following calibration procedures compensate for joystick tolerance and for joysticks that deviate from IBM specification.

Calibrating Joystick A

1. Move the yoke joystick (Joystick A) to its aileron and elevator center positions.
2. Center the joystick's trim controls (if any).
3. Press the K key or select option 4 from the Joystick Calibration menu.

Calibrating Joysticks A and B

1. Move the yoke joystick (Joystick A) to its aileron and elevator center positions.
2. Center its trim controls (if any).
3. Center the trim controls (if any) on the throttle joystick (Joystick B).
4. Pull the throttle joystick all the way back, and center it in the X-direction.
5. Press the K key or select option 4 from the Joystick Calibration menu.

When Joystick A's range is properly calibrated, the aileron indicator is set full left when the stick is fully left and full right when the stick is fully right. The elevator indicator is set full down when Joystick A is fully forward, and full up when the stick is fully back. Likewise, when Joystick A is in its center position, the ailerons and elevators are centered.

Make sure Joystick B is pulled all the way back. If it isn't, the plane will start accelerating.

During flight, you can use any trim controls on the joysticks to make minor adjustments and to keep the controls centered if the calibration drifts.

Adjusting Joystick Sensitivity

The Joystick Calibration menu (select Sim, then Joystick) has joystick sensitivity adjustments. Select the menu option to adjust sensitivity in the desired direction, selecting the sensitivity on a range of 1 (not very sensitive) to 8 or drag the pointers that point to the sensitivity bars using the mouse. Then press ESCAPE to return to the Joystick Calibration menu to adjust the next joystick. When all the joystick sensitivities are set, exit the Joystick Calibration menu by pressing ESCAPE.

C Keyboard Summary

This appendix summarizes all the keyboard functions used to control the airplane.

Controlling Windows and Views

To select or turn on a window:

3-D window 1	[
3-D window 2	]
Map window	NUM LOCK

To turn off a window, press the window's select key twice.

To zoom a window, press the window's select key and + (in), – (out), or BACKSPACE (1X).

To select window mode, press S to cycle through Cockpit, Tower, Track, and Spot.

To change the overlapping window, press the select key for the window you want on top, then press the apostrophe (') key.

To change view direction, press SCROLL LOCK, and then the view direction key (1–9 on the numeric keypad).

Airplane Controls

Control	Key
Lights on/off	L
Carb heat on/off	H
Landing gear up/down	G
Autopilot on/off	Z
Magneto	M, followed by 1 (off), 2 (left), 3 (right), 4 (both), 5 (start), or 0 (lean-cutoff)
Brakes	.
Pause/restart simulation	P
Strobes on/off	O
Sound on/off	Q
Smoke/spray on/off	I

Flight Controls

All keys refer to the numeric keypad.

Control		Keys	
Aileron	Left	4	
	Center	5	
	Right	6	
Elevator	Nose up	2	
	Nose down	8	
Elevator trim	Nose up trim	1	
	Nose down trim	7	
Rudder	Left yaw	0	
	Center rudder	5	
	Right yaw	bottom-right key*	
Flaps	Up	F5 (top)	F1 (left)
	1 notch	F6	F3
	2 notches	F7	F5
	3 notches		F7
	Down	F8	F9
Throttle	Decrease	3	
	Increase	9	
	Cut	F1 (top)	F10 (left)
	Decrease/less	F2	F8
	Increase slow		F6
	Increase fast/more	F3	F4
	Full	F4	F2

*On some keypads, the bottom-right key is +; on others, it is ENTER. Ignore the keycap legend and use the bottom-right key.

Calibration

Instrument	Key
Altimeter	A
Directional Gyro	D

Setting Radios

Radio	Keys
ADF	N2 followed by + or −; NN, NNN followed by + or − for fractional frequency
COM	C followed by + or −; CC followed by + or − for fractional frequency
NAV	N1 or N2 followed by + or −; NN followed by + or − for fractional frequency
Transponder	T (first digit), TT (second), TTT (third), or TTTT (fourth), followed by + or −
VOR OBI	V1 or V2 followed by + or −
DME	B for alternate source NAV 1/NAV 2 F for readout of speed toward station

WWI Ace

Function	Key
Declare war	W
War report	R
Drop a bomb	X
Fire machine guns	SPACEBAR

Menu System

To	Press
Turn on/turn off the menu system	ESCAPE
Deselect a menu or backup through menus	ESCAPE
Deselect all menus	SPACEBAR

Slewing

Function		Key	
Altitude up		Q	
Altitude down		A	
Nose up		9 (main keyboard)	
Nose down		0 (main keyboard)	
Pitch slew	Nose up quick	F5 (top)	F9 (left)
	Nose up slow		F7
	Freeze	F6, F7	F5
	Nose down slow		F3
	Nose down quick	F8	F1
Altitude slew	Down quick	F1 (top)	F10 (left)
	Down slow		F8
	Freeze	F2, F3	F6
	Up slow		F4
	Up quick	F4	F2
Bank slew left		7 (keypad)	
Bank slew right		9 (keypad)	
Heading slew left		1 (keypad)	
Heading slew right		3 (keypad)	
Slew forward		8 (keypad)	
Slew backward		2 (keypad)	
Slew right		6 (keypad)	
Slew left		4 (keypad)	
Freeze		5 (keypad)	
Turn digits on/off		Z	
Set observation angle to straight ahead pitch, north heading, 0° bank		ALT	

Glossary

Note Terms printed in italics in the Glossary are defined elsewhere in the Glossary.

A

Accelerated maneuver stalls Stalls caused by excessive maneuvering loads, imposed by turns, pullups, or other abrupt flight path changes.

Active runway Most large airports have more than one runway. It is usually impractical to have takeoffs and landings from more than one of them at a time (they usually cross each other so that the airport can handle planes taking off and landing under varying wind conditions). Therefore, the runway that is being used is called the "active runway."

Ailerons The control surfaces on the outside trailing edge of the wings that control *roll*.

Airfoil A general term describing a surface or body, such as a wing or propeller blade designed to obtain a reaction, as lift or thrust, from the air through which it moves. Engineers use the term to describe the special shape that produces lift.

Airspace Roughly, the air around a given area. For example, the air around the United States is called the "United States' airspace."

Airspeed indicator The indicator that provides the aircraft's present indicated airspeed. See also *ground speed* and *true airspeed*.

Altimeter The indicator that gives information on the aircraft's present altitude. It is usually calibrated to give mean sea level (MSL) altitude. Most altimeters are called pressure altimeters because they measure the decrease in pressure as the aircraft climbs. Because of this, the altimeter must be calibrated to the local *atmospheric pressure* to compensate for local variations in the pressure that would otherwise make the readings inaccurate.

Angle of attack The angle between the wing's *chord* line and the relative wind.

Artificial horizon The indicator that provides an in-the-cockpit reference for the attitude of the aircraft with respect to the ground. It is used to provide attitude references in circumstances where the true horizon cannot be seen (e.g., flying into a cloud).

ATC Air Traffic Control. The ground-based radio network consisting of Ground Control (controls taxiing to and from the *active runway*), Tower (controls the runway itself, giving permission to land and take off), Departure (controls the *airspace* immediately surrounding the airfield), Center (controls the airspace at higher altitudes), and Approach (controls those aircraft arriving into the airspace immediately surrounding the airfield).

ATIS Automatic Terminal Information Service. A continuous-loop recording played over a specified frequency giving weather and other important information on a given airfield. Usually updated once an hour. Air traffic controllers use the *phonetic alphabet* to relay frequencies over the air.

Atmospheric pressure The pressure exerted by the air on the earth and everything on it. This is measured in inches (or millibars) of mercury on an instrument called a barometer. Thus, the term *barometric pressure* is frequently interchanged with atmospheric pressure. Typically, the pressure is between 28 and 32 inches of mercury at sea level.

Attitude flying Flying based on the attitude, or aircraft's orientation (notably *pitch* and *bank*) to the world around it.

Auto-coordinated The term that describes the interconnection between the *rudder* and *ailerons* that automatically moves one as the pilot moves the other, resulting in properly coordinated turns (no *slips* or *skids*).

B

Bank See *roll*.

Barometric pressure See *atmospheric pressure*.

Bleed off The process in which a given parameter (such as airspeed or altitude) is slowly decreased in a carefully controlled manner.

C

Canted gyroscope A gyroscope within a flight instrument (usually the turn coordinator) with a rotational axis that is tilted or canted, with relation to the aircraft's *longitudinal axis*. The tilted axis causes the gyro to respond to *rolling* or *yawing* motion.

Ceiling The altitude of the base of the cloud cover.

Chord The measurement of the wing taken from the leading edge to the trailing edge.

COM Short for communications. Usually taken to mean the communications radio.

COM-NAV or NAV-COM A radio that combines the functions of a communications radio with those of a navigational radio.

Control yoke The control wheel and connections that control the *ailerons* and *elevators*. The ailerons are controlled by turning a "steering wheel," and elevators are controlled by pushing the wheel toward or away from you.

Coordinated flight See *Auto-coordinated*.

D

Dead reckoning The navigation of an airplane solely by computations based on airspeed, course, heading, wind direction and speed, ground speed, and elapsed time.

Density altitude The altitude in the standard atmosphere (surface temperature 59° F and pressure 29.92 inches at sea level) where air has the same density as the air at the altitude being considered.

Dihedral The angle (if any) that the wings are tilted upward. Upward dihedral, which forms a slight "V" shape as you look at an aircraft's front view, increases stability and tends to level a plane automatically after a turn.

Directional gyro See *heading indicator*.

Distance Measuring Equipment (DME) A radio that determines and displays distance from a *VOR* in nautical miles.

Drag Those forces that oppose the movement of an aircraft through the air.

E

Elevators The control surfaces on the trailing edge of the *horizontal stabilizer* that control the aircraft's *pitch*. When the elevators are down (the yoke is pushed forward), the stabilizer is pushed up by the air. This forces the nose down and causes the aircraft to dive. The opposite is true for climbs.

F

FAA The Federal Aviation Administration. The agency (under the direction of the Department of Transportation) responsible for maintaining safe and efficient use of the nation's *airspace* by military and civil aviators, for fostering civil aeronautics and air commerce in the U.S. and abroad, and for supporting the requirements of national defense.

Fixed Base Operators A person or organization at an airport that runs an aircraft sales or rental agency.

Flaps Movable *airfoil* sections, located on the trailing edge of the wings, that are lowered on takeoff and landing to increase the wings' lift and *drag*.

Flare The last segment of a landing approach. It is the act of leveling off a foot or two above the runway prior to landing by raising the nose of the aircraft just prior to touchdown.

G

Glideslope A navigation aid used on *ILS* approaches in the terminal area electronic navigation system that provides vertical guidance to aircraft as they approach the runway for landing.

Ground speed The aircraft's actual speed relative to the ground. For example, if an aircraft is flying at 120 knots *true airspeed* and has a 15-knot headwind, its ground speed is 105 knots.

H

Heading The direction in which the aircraft is pointed. This is not necessarily the direction the plane is traveling. It is usually referred to as a magnetic heading, but "degrees" typically is omitted by experienced pilots ("My heading is 324").

Heading indicator (directional gyro) A gyroscopically controlled compass that is designed to give *heading* information based on the forces acting upon a gyroscope, rather than any actual *magnetic* reading. It is used to provide a more accurate readout of *heading* without having to deal with magnetic compass lag and "settling time" after turns and climbs.

Horizontal stabilizer The surface that is used to provide stabilization along the aircraft's lateral axis (helps to control *pitch*). Usually thought of as part of the airplane's "tail."

I

Initial climb Your climb away from the runway, after you *lift off*.

Instrument Flight Rules (IFR) The "rules of the road" that cover flight in *Instrument Meteorological Conditions (IMC)*.

Instrument Landing System (ILS) A system of radio transmitters and receivers and special flight rules that provide a three-dimensional in-the-cockpit reference for landing. The radio signals consist of a localizer, which is very similar to a *VOR*, except that it transmits only a single, very directional signal that will lead you to a specific runway at an airport on the correct *heading*; the *glideslope*, which does much the same, except that it does so in the vertical, thereby assuring that touchdown will be on the runway, and not before or after; outer, middle, and inner marker beacons that indicate distance from the runway; and approach lights. The instruments used are the glideslope needle and the localizer needle. These instruments are part of the *Omni-Bearing Indicator*.

Instrument Meteorological Conditions (IMC) The weather conditions that force flight under *Instrument Flight Rules*.

Isogonic lines Lines of equal *magnetic variation* of true north from magnetic north due to the different locations of the true and magnetic poles of the earth.

K

Knots Nautical miles per hour. A "nautical mile" is defined as 1 minute of longitude at the equator, or 1.15 "statute miles." To convert from knots to statute miles per hour, multiply knots by 1.1507. To convert the other way, multiply statute miles per hour by .869.

L

Landing gear The wheels, struts, and other equipment that the aircraft uses to land and maneuver on the ground. Landing gear typically come in one of two variations: "tail dragger," in which the aircraft seems to sit on its tail; and "tricycle," in which the plane sits level with the ground with one nose-wheel and two wheels farther back on the plane. The main landing gear are those nearest the aircraft's center of gravity, and almost always come in pairs (left and right main gear). They are designed to take more landing shock than the more fragile nose-wheel or tailwheel.

Lateral axis The imaginary axis running from side to side through the wings.

Lift The upward force on the aircraft.

Lift off The movement by which the aircraft leaves the ground on takeoff.

Longitudinal axis The imaginary axis running from front to rear through an aircraft's center of gravity and approximately parallel to the thrust line (the propeller's axis).

M

Magnetic Refers to the reading on a magnetic compass.

Magnetic variation The variation angle between "true north" and "magnetic north." This varies from location to location and must be taken into account for long-range navigation.

Magneto A device that combines the functions of an automobile engine's coil and distributor. It takes energy from the aircraft engine in the form of rotational energy and, by use of magnetics and induced electricity, creates the high voltages required for the spark plugs.

Maneuvering speed The speed at which maneuvers that create excessive G forces could damage the aircraft's structure.

Manually-coordinated (uncoordinated flight) See *Uncoordinated flight*.

N

NAV Short for Navigational. Usually taken to mean the navigational radio.

Nose over The plane's lift behind the center of gravity makes the plane want to nose over, or pitch forward.

O

Omni-Bearing Indicator (OBI) The indicator that provides information about the aircraft's position relative to the presently tuned *VOR* station. Usually provides the ability to "dial in" or select a given course or radial, and includes a TO-FROM indicator and a Course Deviation Indicator (CDI). On aircraft with *ILS* capabilities, a Glideslope Deviation Indicator (GDI) is also incorporated in this instrument. There is no official name for this instrument. It is sometimes referred to as the Omni-Bearing Selector (OBS) or VOR receiver and indicator.

P

Phonetic alphabet A special way of saying letters and numbers that makes them less likely to be misunderstood when they are transmitted over radios.

A	ALPHA	N	NOVEMBER	1	WUN
B	BRAVO	O	OSCAR	2	TOO
C	CHARLEY	P	PAPA	3	TREE
D	DELTA	Q	QUEBEC	4	FOWER
E	ECHO	R	ROMEO	5	FIVE
F	FOXTROT	S	SIERRA	6	SIX
G	GOLF	T	TANGO	7	SEVEN
H	HOTEL	U	UNIFORM	8	AIGHT
I	INDIA	V	VICTOR	9	NINER
J	JULIET	W	WHISKEY	0	ZEEROH
K	KILO	X	XRAY		
L	LIMA	Y	YANKEE		
M	MIKE	Z	ZULU		

In addition, numbers are usually spoken as individual digits. For example, 123 would be read as "wun too tree."

Pilotage Flying cross-country, from one visible landmark to another, using only a flight chart.

Pitch The movement of the aircraft about its lateral axis (nose up or nose down). If the nose is pointed down, we say it is "pitched forward," and when it is pointed up, we say it is "pitched backwards."

Power glide A long, shallow approach in which engine power is used to maintain the glide. Power glides should be avoided when they are not required to maintain *IFR* approach angles, because engine failure can cause you to land short of the runway.

R

Radials Directional beams that radiate from a VOR station.

Radio stack The area where the *COM*, *NAV*, and *transponder* radios are installed in the instrument panel. They are usually installed "on top of one another" as though they were stacked.

Rate of climb The rate (measured in feet per minute) at which an aircraft is climbing. The term is also loosely stretched to include the rate of descent. The rate of climb is read on the *rate of climb indicator*. If an aircraft is at 1000 feet and is climbing at 500 feet per minute, then in one minute it will be at 1500 feet.

Rate of climb indicator The indicator that gives information on the rate of increase and decrease of an aircraft's altitude. Also known as a "Vertical Speed Indicator" (VSI) or "Vertical Velocity Indicator" (VVI).

Rate of sink Negative vertical velocity expressed in feet per second.

Roll Those actions taking place about the aircraft's *longitudinal* (or roll) *axis*.

Rotation Pulling back the control yoke and raising the nose off the ground.

Rotation speed The speed at which the pilot should pull back on the control yoke to begin rotation during takeoff.

Roundout See *Flare*.

Rudder The control surface, mounted on the trailing edge of the *vertical stabilizer* (the tail), that controls *yaw*.

Running lights The anti-collision light system that is required by the *FAA* on an aircraft in flight. The system includes flashing or rotating beacon position lights (a red light on the left wingtip, a green on the right, and a white on the tail). These tell another aircraft which direction an aircraft is flying when only the lights can be seen.

S

Skid An aircraft's sideways sliding away from the center of the curve while in a turn.

Slip An aircraft's sideways motion while turning.

Standard pressure 29.92 inches of mercury, or 1013 millibars. The pressure to which you calibrate at altitudes above 17,999 feet.

Standardized instrument cluster An industry-accepted de facto standard for the placement of the six most commonly used flight instruments. The top row includes (from left to right): the *airspeed indicator*, attitude indicator, and *altimeter*. The bottom row includes (from left to right): the turn coordinator (or needle/ball), *heading indicator*, and *rate of climb indicator*.

T

Tachometer The instrument that gives information concerning the speed of rotation of the engine. It is marked in rotations per minute (RPM).

Takeoff roll You apply full power and the plane accelerates until it gets to flying speed.

Taxi The action of moving the aircraft on the ground.

Throttle The control that determines the speed of the engine.

Thrust Forward force generated by the propeller or jet engine.

Transponder An airborne radio beacon transceiver that receives interrogation signals from *ATC* and selectively replies with a preset identification code (a "squawk code") set by the pilot. The squawk code is received by ATC and identifies and appears next to the aircraft on ATC radar.

Trim The smaller control surfaces that affect the *elevators* in such a way as to make it less necessary to hold force continually on the yoke to maintain straight and level flight. Large aircraft also have *aileron* and *rudder* trim.

True airspeed The actual speed of an aircraft through the air after compensating for *density altitude*.

Type certificate A rating based on aircraft strength and purpose that puts an aircraft into Normal, Utility, or Aerobatic categories, and under FAR Part 23, limits the classes of maneuvers it can legally perform.

U

Uncoordinated flight The mode of flight in which the pilot coordinates the *ailerons* and *rudder* (see also *auto-coordinated*).

V

Vertical stabilizer The surface of the aircraft that is used to help control motion about the aircraft's vertical or *yaw* axis.

Visual Flight Rules (VFR) The "rules of the road" that cover flight in those conditions wherein flight can be safely controlled by "looking out the window."

VOR Acronym for Very high frequency Omnidirectional Range. This is a ground-based radio transmitter that provides positive guidance on pilot-selected *magnetic* course *radials* or straight lines. It is used in conjunction with the *NAV* radio and the VOR indicator.

W

Weathervane effect The tendency of the plane to pivot around a pivot point (the center of gravity on an airplane) until the airfoils are in back of the pivot point with relation to the oncoming wind.

Y

Yaw The rotation about the aircraft's vertical or yaw axis.

Index

0 key (main keyboard), slewing nose down 77, 186
0 key (numeric keypad)
  message mode 142
  rudder adjustment 23, 184
1 key (numeric keypad)
  elevator trim adjustment 34, 184
  heading slew left 77, 186
  OBI radial readout 123
  viewing from aircraft 26
2 key (numeric keypad)
  nose up 21, 184
  OBI radial readout 123
  slew backward 77, 186
  viewing behind aircraft 26
3-D *See* Three-dimensional window
3 key (numeric keypad)
  heading slew right 77, 186
  throttle decrease 184
  viewing from aircraft 26
4 key (numeric keypad)
  aileron left 19, 184
  slew left 77, 186
  viewing from left of aircraft xviii, 26
5 key (numeric keypad)
  aileron
    centering 19, 23, 184
    neutralizing xix
  rudder centering 23, 46-48, 184
  slewing freeze 77, 186
  viewing below aircraft 26
6 key (numeric keypad)
  aileron right 19, 184
  slew right 77, 186
  viewing from right of aircraft 26
7 key (numeric keypad)
  bank slew left 77, 186
  elevator trim adjustment 34, 184
  viewing from aircraft 26
8 key (numeric keypad)
  forward view from aircraft 26
  nose down 21, 184
  slew forward 77, 186
9 key (main keyboard), slewing nose up 77, 186
9 key (numeric keypad)
  bank slew right 77, 186
  throttle increase 184
  viewing from aircraft 26

A key
  altimeter setting 12, 39, 184
  barometric pressure adjustment 12, 39
  slewing altitude down 77, 186
Accelerated maneuver stall 104, 187
Accelerating 48
Ace *See* Enemy; World War I Ace game
Active runway
  defined 187
  numbers 47, 51, 159-173
ADF
  activating 38
  description 14, 79, 126
  NAV 2 radio 13, 38
  NDB tuning 126-127
  radio stack display 6-7
  setting 38, 75, 185
ADF menu option 38, 75
Aerobatics
  aileron roll 114-116
  demo mode xv
  formation flying game 137
  Hammerhead 118-119
  Immelman 117
  inverted flight 115-117
  lessons 109-119
  loop 32, 112-113, 117
  maneuver analysis 129-130
  multiple player viewing 143
  spin 110-111
  Split S 116
  spot plane 26, 32
  zoom control setting 28
Aileron
  adjustment 18-19, 46, 184
  Auto-coordinated Flight mode 46, 49, 71-72
  banking 14, 18-19, 49, 90, 98
  control yoke operation 18, 46, 188

Aileron *(continued)*
defined 14, 18, 187
figure 17-18
Hammerhead 119
instrument display *See* Aileron position indicator
inverted flight 115
joystick control 19, 179-182
keyboard control 19, 184
mouse control 19, 179
neutralizing xix
null zone adjustment 179
position indicator *See* Aileron position indicator
pre-takeoff check 47
roll *See* Aileron roll
rudder linkage 15, 46, 49, 71-72
slip 105
straight and level flight 97
takeoff 100
Uncoordinated Flight mode 46, 105, 114
Aileron position indicator
See also Control position indicator
Auto-coordinated Flight mode 15
described 14
instrument panel display 6-7, 19, 46
joystick calibration 182
Aileron roll 114-116
Air traffic 91, 106
Air Traffic Control (ATC) 14, 187
Air traffic control communications menu option 75
Aircraft
attitude 19, 21, 23, 90
baggage loading 90
Cessna *See* Cessna
color changing 142
components 17
controlling movement *See* Aircraft control
crop-dusting plane 137
damaged by gunfire 148
enemy *See* Enemy aircraft
fighter plane *See* World War I Ace game
Learjet *See* Learjet
line drawing, shading display 26, 31
loading 90
performance specs 59-61, 175-176
radar screen display 147
rating *See* Type certificate
reliability setting 71, 73
Aircraft *(continued)*
selecting 8, 59, 61
sending to other player 141-142
specifications 59-61, 175-176
stability 88-89
viewing
from cockpit xviii, 26
other aircraft 27, 141
Aircraft control
attitude flying *See* Attitude flying
center of gravity 87-89
lateral axis 20, 191
longitudinal axis 18, 191
pitch *See* Pitch
pivot point 88-89
rotation 18, 48, 193
vertical axis 22
yaw *See* Yaw
Aircraft Library menu option 59, 61
Airfoil 14, 187
Airport
See also specific airport
approach information *See* ATIS
beacon 13, 78-79, 128
coordinates 75, 78, 153-157, 159-173
directory 153-157
elevation 153-157, 159-173
fuel facilities 51, 153-157
maps 159-173
number of 76
runway *See* Runway
servicing facilities 51
starting point xviii, 45, 59
taxiing 47, 96
Airspace
defined 187
uncontrolled 92
Airspeed
bleeding off 51, 54, 188
flight physics 90-91
indicator *See* Airspeed indicator
Learjet 54
loop 113
maneuvering speed 104, 192
measuring 79
reducing 34, 50
stall *See* Stall speed
true airspeed 194
warning buzzer 54

Airspeed indicator
aircraft control 91
defined 11, 187
display 6-7
Learjet 53
straight and level flight 49
VFR flying 45
Alderwood Manor airport 155
ALT key, observation angle setting 77, 186
Altimeter
aircraft control 91
calibrating 12, 39, 184
defined 12, 187
instrument panel display 6-7
reading 12, 39, 46
reality mode 39
setting 12, 39, 184
straight and level flight 49, 97
VFR flying 45
Altitude
cruising level 92
Learjet maximum 176
lock 79-80
losing
inverted flight 115
straight and level flight 49
turning 50, 98
mean sea level 68-69, 187
measuring 12, 46
reducing 50
slewing control 77, 186
Ammunition indicator 147
Angle of attack 88, 187
Angle of climb 99
Apostrophe key ('), window overlapping 31, 183
Approach
See also Landing
information 14, 38
lights 128
Arlington Municipal airport 155
Artificial horizon
defined 12, 187
instrument panel display 6-7
Asterisk key (*), viewing direction 28
ATC 14, 187
ATIS
airport frequencies 159-173
approach information 14, 38
defined 188
ATIS *(continued)*
weather information 14, 38
Atmospheric pressure
See also Barometric pressure
defined 188
Attitude
See also Attitude flying
figures 19, 21, 23
indicator *See* Attitude indicator
Attitude flying
aircraft control 90-91
defined 188
lesson 97
Attitude indicator
aircraft control 19, 21, 23, 90
described 12
instrument panel display 6-7, 19, 21, 23
Auburn Municipal airport 155
Aurora Municipal airport 154
Auto-coordinated Flight mode
aileron, rudder action 15, 46, 49, 71-72
auto coordinated defined 188
joystick control 181
loop lesson 113
Auto coordination menu option 71-72
AUTOEXEC.FS3 file xvii
Automatic Direction Finder *See* ADF
Automatic Terminal Information Service *See* ATIS
Autopilot
cross-country flight 79
multiple player flight 143
on/off indicator *See* Autopilot status indicator
setting 8, 79-80
turning on/off 75, 80, 183
Autopilot menu option 75, 79-80
Autopilot set menu option 75, 79
Autopilot status indicator
control panel display 6-7, 80
described 15
Avalon airport 156, 159
AVX *See* Catalina airport
Axis indicator
described 15
instrument panel display 6-7
shape selecting 25
turning on/off 15, 25, 31
Axis indicator menu option 15, 25, 31

B key
  NAV 2 radio selecting 38, 185
  window moving 30
Backslash key (\)
  demo recording ending 64
  maneuver analysis ending 129-130
BACKSPACE key, zooming 26, 28, 76, 183
Backup copy of program disk xiii
Baggage loading 90
Banking
  See also Rolling; Turning
  aileron control 14, 18-19, 49, 90, 98
  aileron roll 114-116
  artificial horizon 12
  attitude indicator 12, 90
  defined 12
  elevator 98
  joystick control 19
  keyboard control xviii-xix, 19, 186
  mouse control 19, 178-179
  null zone adjustment 179
  rudder 98
  slewing control 77, 186
  slip 105
  turn coordinator 12
  turning lesson 98
Barometric pressure
  See also Atmospheric pressure
  altimeter setting 12, 39
  altitude reading error 12
Battleground 145
BDR *See* Igor I. Sikorsky Memorial airport
Beacon 13, 78-79, 128
Bearing *See* Magnetic bearing
BFI *See* Boeing Field
Bleed off 51, 188
Block Island State airport 153, 160
Bloomington-Normal airport 154
Blue Island airport 154
Boeing Field 155, 172
Bombs 146-148, 185
BOS *See* General Edward Lawrence Logan International airport
Boston area airports 153, 160
Bracket key *See* Left bracket key ([); Right bracket key (])
Brackett Field 156
Bradley International airport 153
Brake
  automatic release 25
Brake *(continued)*
  keyboard control 24-25, 47, 51, 183
  indicator display *See* Brakes applied and status indicator
  joystick control 24, 179-181
  landing 51
  mouse control 24, 178
  taxiing 47
Brakes applied and status indicator 6-7, 16
Bremerton National airport 155
Bridgeport airport 153, 161
Buchanan airport 157
Bulb replacement 35
Business jet *See* Learjet
Buzzer *See* Warning buzzer
Bytes required xii

C key, COM radio setting 38, 185
Calibrating
  altimeter 12, 39, 184
  directional gyro 13, 39, 184
  heading indicator 13
  joystick 181-182
Cannon airport 157
Canted gyroscope 188
Carburetor
  heat
    icing prevention 35, 103
    indicator *See* Carburetor heat indicator
    turning on/off 35, 183
  mixture lean indicator 15
Carburetor heat indicator 6-7, 15
Carlsbad airport 156
Catalina airport 156, 159
CDI 123
Ceiling 188
Center of gravity 87-89
Center key *See* 5 key (numeric keypad)
Cessna
  aircraft specifications 61, 175
  flying procedures 45-52
  fuel tank capacity 76, 175
  performance specs 61, 175
  selecting 59, 61
  takeoff weight maximum 54, 175
CFPD 131
CGX *See* Merrill C. Meigs airport
Champaign-Urbana airport 154, 162
Chandler Downtown airport 157

Chester airport 153
Chicago area airports 154
Chicago Midway airport 154, 163
Chicago-O'Hare International airport 154, 164
Chico airport 157
Chino airport 156
Chord 188
Climb rate *See* Rate of climb
Climbing
See also Rate of climb
airspeed control 99
cruise climb 99
elevator position 48-49, 189
initial climb 100, 190
lesson 98-99
turn 98-99
CLM *See* William R. Fairchild International airport
Clock
described 13
instrument panel display 6-7
setting 13, 67-68
Cloud
artificial horizon 187
ceiling defined 188
night flight 36
setting 8, 67-68
thunderstorms 67, 69
turning off 68
Clouds menu option 67-69
Clow International airport 154
CMI *See* University of Illinois-Willard airport
Cockpit mode
selecting 8, 25-28, 183
tower mode/cockpit mode alternating 28
viewing directions 25-26, 28
Cockpit view *See* Cockpit mode
Colon (:) xi, 9
Color
aircraft 142
screen display 8
Columbia airport 157
COM defined 188
COM radio
airport information 14, 38
described 14, 79
frequencies 14
radio stack display 6-7
setting 38, 75, 185
COM radio menu option 75
Command Flight Path Display (CFPD) 131
Communication
multiple player 139
NAV/COM radio 8
Communication radio *See* COM radio
Compass
heading indicator calibrating 13
reading 46
Compton airport 156
Computer, connecting multiple 139-141
Concord airport 157
Constellations 67
CONTROL+BREAK xvii
CONTROL+C xvii
Control panel
autopilot status indicator 80
instrument panel display 6-7
moving 29
partial panel flying 74
Control panel instruments menu option 71, 74
Control position indicator 29-30, 71-72
Control position indicator menu option 71
Control tower placement 78
Control yoke
aileron control 18, 46, 188
defined 18, 188
elevator control 18, 34, 46, 188
mouse actions xii, 9, 177-179
Control Yoke mode
mouse functions 178
Pointer mode toggling xii, 9, 179
Coordinated flight
See also Auto-coordinated Flight mode
defined 12, 105
Coordinated turns 12
Coordinates
airport 75, 78, 153-157, 159-173
multiple player display 141
setting 78
slewing 76, 78
Copy protection xiii
Copying program disk xiii
Corona Municipal airport 156
Course Deviation Indicator (CDI) 123
Course plotting 59, 130
Course Plotting menu option 130
Course selector 123-124
Course selector knob 123
Crash menu option 71-72

Crashing
  analyzing 72-73
  automatic reset xix, 47, 72
  CRASH message 47
  detector setting 71-72
Create mode menu option 59
Crop Duster game 59, 137
Cross-country flight
  aircraft loading 90
  autopilot 79
  course plotting 130
  cruising altitude 92
  pilotage 121, 193
Crosswind
  course deviation 124
  landing 105
  takeoff 100
Cruising
  aircraft specs 175-176
  altitude 92
  cruise climb 99
CT airport frequencies 159-173

D key
  Directional Gyro key 39, 184
  heading indicator adjustment 13, 39
Danbury Municipal airport 153
Danielson airport 153
Danville airport 154
Dawn conditions 67-68
Day conditions 67-68
Dead reckoning 121, 189
Definitions 187-195
Demo flight xv, 8, 59, 63-65
Demo Recorder menu option 59, 64
Density altitude 189
Departure *See* Takeoff
Descending
  airspeed control 99
  lesson 99
  procedure 50
  rate of descent display 91
Destination coordinate setting 75, 78
Dihedral
  defined 189
  effects 49
Direc: menu option 25, 28
Direction keys 29-30
Directional gyro
  See also Heading indicator
  calibrating 13, 39, 184
  described 13
  instrument panel display 6-7
  setting 39, 184
Distance measuring
  DME *See* DME
  knots 38
  nautical miles 14, 126
  to runway 128
Distance Measuring Equipment *See* DME
DME
  defined 14, 189
  distance measuring 38, 79, 126
  function 79, 126
  groundspeed measuring 38, 126
  NAV radio source 38, 185
  navigational aid 14, 78
  radio stack display 6-7
  range limitations 126
  velocity readout 38, 126
Dogfight
  Immelman turn 117
  World War I Ace game 145
Dots (...) xi, 9
Douglas County airport 157
DOWN arrow key
  See also 2 key (numeric keypad)
  elevator raising xviii, 21
  nose up 21
  viewing behind aircraft xviii, 26
  window height increasing 30
Drag
  defined 33, 88, 189
  flap position 33-34
  flight physics 87-88
  landing gear lowering 54
  slip 105
DuPage airport 154
Dusk conditions 67-68
Dwight airport 154

EFIS/CFPD 59, 75, 131
El Monte airport 156
Electronic Flight Instrument Systems *See* EFIS/CFPD

Elevator
adjustment xviii, 20-21, 46, 184
aileron roll 114
banking 98
climbing 48-49, 189
control yoke operation 18, 46, 188
defined 15, 20, 189
descending 50
diving 50
figure 17, 20
Hammerhead 119
Immelman turn 117
instrument display *See* Elevator position indicator
inverted flight 115
joystick control 20-21, 179-181
keyboard control 20-21, 184
landing 51, 99, 101, 103
loop 113
mouse control 20-21, 178
pitch control 15, 20-21
position indicator *See* Elevator position indicator
pre-takeoff check 47
spin recovery 111
Split S 116
stalling 49, 103-104
takeoff 48-49, 100
trim *See* Elevator trim; Elevator trim indicator
turns 50, 98, 105
Elevator position indicator
described 15
instrument panel display 6-7, 21, 46
joystick calibration 182
mouse actions 178
Elevator trim
adjustment 34, 184
defined 34
keyboard control 34, 184
realism mode 73
trim defined 194
Elevator trim indicator 6-7, 15
END key *See* 1 key (numeric keypad)
Endurance specs 175
Enemy
ace 147
airbase locations 145-146
instructions 147
shooting 148
Enemy *(continued)*
skill level 147-148
Enemy aircraft
downing, points 145
location 148
number 146, 148
patrol 148
radar screen display 147
replacement 148
shooting 148, 185
types 147
Enemy territory 146
Engine
failure on landing 35, 51
ignition coil *See* Magneto
Learjet 53, 176
realism mode 73
shutdown *See* Magnetos indicator
spooling up 53
ENTER key, right yaw 23, 184
Entertainment mode
Crop Duster menu option 137
Flying in Formation menu option 137
menu option 59
Multi-Player menu option 139-142
Enviro menu
Clouds menu option 67-69
menu bar 8
menu options 67-69
Season menu option 67
Stars menu option 67
Time Set menu option 13, 67-68
Winds menu option 67, 69
Environmental control 8, 67-69
ESCAPE key
instant replay 63
menu
closing 10
selecting xii
menu bar activating 10
menu system turning on/off 10, 185
message mode turning off 142
normal flight resuming 130
Everett airport 155, 165
Exiting
Flight Simulator program xvii, 59
menu system 10
message mode 142
Multi-Player mode 142
slew system 78

F key
  velocity readout 38, 126, 185
  window moving 30
F1 key
  left
    flap adjustment 33, 184
    pitch slew nose down quick 77, 186
  top
    altitude slew down 77, 186
    throttle cut 24, 184
F2 key
  left
    altitude slew up quick 77, 186
    throttle full xviii, 24, 184
  top
    altitude slew freeze 77, 186
    throttle decrease 24, 184
F3 key
  left
    flap adjustment 33, 184
    pitch slew nose down slow 77, 186
  top
    altitude slew freeze 77, 186
    throttle increase 24, 184
F4 key
  left
    altitude slew up slow 77, 186
    throttle increase 24, 184
  top
    altitude slew up 77, 186
    throttle full xviii, 24, 184
F5 key
  left
    flap adjustment 33, 184
    pitch slew freeze 77, 186
  top
    flap adjustment 33, 184
    pitch slew nose up 77, 186
F6 key
  left
    altitude slew freeze 77, 186
    throttle increase 24, 184
  top
    flap adjustment 33, 184
    pitch slew freeze 77, 198
F7 key
  left
    flap adjustment 33, 184
    pitch slew nose up slow 77, 186
F7 key *(continued)*
  top
    flap adjustment 33, 184
    pitch slew freeze 77, 186
F8 key
  left
    altitude slew down slow 77, 186
    throttle decrease 24, 184
  top
    flap adjustment 33, 184
    pitch slew nose down 77, 186
F9 key (left)
  flap adjustment 33, 184
  pitch slew nose up quick 77, 186
F10 key (left)
  altitude slew down quick 77, 186
  throttle cut 24, 184
FAA 189
Fall conditions 67-68
Fallbrook Community Airpark 156
Farmingdale airport 153
Federal Aviation Administration 189
First 3D menu option 25
Fixed Base Operator 189
Flap
  adjustment 33-34, 184
  airspeed reducing 34, 50
  defined 33, 189
  figure 17
  gliding 50
  keyboard control 33, 184
  landing 33, 50, 101
  lift 33-34
  mouse control 33
  position indicator *See* Flap position indicator
  stall speed 33, 50
  takeoff 33
Flap position indicator 6-7, 15
Flare 51, 189
Flight
  aerobatics *See* Aerobatics
  analysis 59, 96, 129-130
  auto-coordinated *See* Auto-coordinated Flight mode
  autopilot *See* Autopilot
  coordinated flight
    See also Auto-coordinated Flight mode
    defined 12, 105
  cross-country *See* Cross-country flight

Flight *(continued)*
dead reckoning 121, 189
demo xv, 8, 59, 63-65
destination coordinates *See* Coordinates
environmental control 8, 67-69
first flight xviii
freezing *See herein* pausing
hours logged 59
information storage 60
instant replay 8, 59, 63
inverted
See also Aerobatics
procedure 115-117
lessons *See* Lessons
multiple players *See* Multi-Player mode; Multiple players
night *See* Night flight
partial panel flying 74
pausing 8, 48, 71, 143, 183
physics 87-90
progress check 125
publications x-xi, 87, 91, 95
real-time simulation 76
realism mode 71, 73
recording 63-64
restarting
after demo 65
after instant replay 63
after maneuver analysis 130
after slewing 78
Flight Simulator program xii, 71, 183
returning to beginning 61
slewing *See* Slewing
straight and level 12, 49, 97
time 76
training *See* Lessons
uncoordinated *See* Uncoordinated Flight mode
upside down *See herein* inverted
Flight analysis 59, 96, 129-130
Flight Analysis menu option 59, 129-130
Flight Instruction menu
Hammerhead menu option 119
Immelman menu option 117
Inverted flight menu option 115
Loop menu option 113
menu option 59, 95
Spin menu option 111
Split S menu option 116
Flight instrument calibration 12-13, 39, 184
Flight mode
changing 63
loading earlier version 63
report 62
resetting 61
saving 60, 62
selecting 8, 59, 61
storing *See herein* saving
Flight physics 87-90
Flight school
See also specific lesson
lessons 82-131
Flight Simulator program
copy protection xiii
exiting xvii, 59
games 134-148
loading earlier version 63
memory requirements xii
mouse startup 177
multiple players *See* Multiple players
pausing 8, 48, 71, 143, 183
quitting xvii, 59
restarting xii, 71, 183
startup xiii-xvii, 177
system requirements xii-xiii
world database 76
Floppy disk system
scenery specifying 75
starting Flight Simulator xiii-xvii
Flying F. Ranch airport 155
Flying in Formation menu option 137
Formation flying game 59, 137
Frankfort airport 154
Frasca Field 154
Fresno Air Terminal 157
Friendly Base 1 145, 148
Friendly Base 2 145, 148
From: menu option 25, 27
Fuel
fuel tank capacity 76, 175-175
gauge 6-7, 13
pre-takeoff check 48
Fuel depot bombing 146, 148
Full screen tower view menu option 25, 31
Fuselage
color 142
figure 17

G key, landing gear 36, 51, 183
Games 134-148
Garberville airport 157
Gates Learjet *See* Learjet
Gear indicator 6-7, 15
General Edward Lawrence Logan International airport 153, 160
Gibson City Municipal airport 154
Glenn County airport 157
Glideslope
  defined 13, 190
  ILS 128, 190
  instrument panel display 6-7
Gliding
  landing 51, 101, 193
  power glide 193
  procedure 50
Graphics display 8
Greater Kankakee airport 154, 166
Ground
  steering 51, 100
  visibility 92
Ground level 12
Ground school 87-93
Ground speed
  defined 190
  measuring 126
Ground texture menu option 71-72
Gunfire 147-148

H key
  carburetor heat 35, 183
  window moving 30
Hammerhead 118-119
Hammerhead menu option 119
Hard disk system
  installing Flight Simulator xiv
  scenery specifying 75
  starting Flight Simulator xiv-xvii
Hartford-Brainard airport 153
Harvey Field 155
Hawthorne Municipal airport 156
Hayes-compatible modem 139-140
Heading
  changes 12
  defined 190
  estimating 124
  lock 79-80
  slewing control 77, 186
Heading indicator
  See also Directional gyro
  attitude flying 90
  calibrating 13
  defined 13, 190
  instrument panel display 6-7
  pre-takeoff check 48
  reading 46
  reality mode 46
  setting 39
Heads-up display (HUD) 6-7, 131
HOME key *See* 7 key (numeric keypad)
Horizontal stabilizer 17, 20, 190
Horsepower 88, 175
Hours, logging 59
Howel airport 154
HUD *See* Heads-up display (HUD)
Hughes airport 156
Huntington Beach airport 156

I key
  crop-dusting spray 137
  smoke system 71-72, 183
IBM Game Control Adapter Card 179-181
Icing prevention 35, 103
IFR *See* Instrument Flight Rules (IFR)
Igor I. Sikorsky Memorial airport 153, 161
IKK *See* Greater Kankakee airport
ILS
  defined 190
  frequencies 153-157
  landing 128
  NAV radio 14
IMC 191
Immelman menu option 117
Initial climb 100, 190
INSERT key *See* 0 key (numeric keypad)
Instant replay 8, 59, 63-64
Instant Replay menu option 59, 63
Instructor Control mode 95
Instrument
  drift 73
  flying on *See* Instrument Flight Rules (IFR)
  scanning 91
Instrument Flight Rules (IFR)
  defined 190
  FAA regulations 5
  flying under 93

Instrument Landing System *See* ILS
Instrument Meteorological Conditions (IMC) 191
Instrument panel
See also specific instrument
display 6-8, 11
fighter aircraft instrumentation 147
joystick control 179-182
key control summary xii, 183-186
Learjet 53
mouse control 177-179
resizing window 11
Instrument panel lights *See* Lights
Inverted flight 115-117
Inverted flight menu option 115
Islip airport 153
Isogonic lines 191
Issaquah airport 155

Jet mode *See* Learjet
JFK *See* John F. Kennedy International airport
John F. Kennedy International airport 153, 168
John Wayne Airport 156, 171
Joliet Park District airport 154
Joystick
aileron control 19, 179-182
Auto-coordinated Flight mode 181
banking 19
brake control 24, 179-181
calibrating 181-182
connecting 179-180
elevator control 20-21, 179-181
installing 180-181
pitch control 20-21
recording limitations 64
rolling 19, 181
rudder control 23, 179-181
sensitivity
adjustment 71, 182
saving 62
setup 8, 180-181
slewing 76-77
system requirements 179-180
throttle control 24, 179-182
World War I Ace game 147
Y-adapter 180-181
yaw control 19
Joystick Calibration menu 182
Joystick menu option 71, 180

K key, joystick calibrating 182
Kankakee airport 154, 166
Keyboard
aileron control 19, 184
banking xviii-xix, 19
braking 24-25, 47, 51, 183
calibrating instruments 12-13, 39, 184
elevator control 20-21, 184
elevator trim control 34, 184
flap adjustment 33
menu selecting 8
mode xvi, xviii
pitch control 20-21
rolling 19
rudder control 23, 184
sensitivity
control 71, 74
saving 62
slewing control 77, 186
summary 183-185
throttle control 24, 184
view direction 26, 183
window adjustment summary 183
World War I Ace game 147, 185
yaw control 19
Keyboard mode xvi, xviii
Keyboard sensitivity menu option 71, 74
King County International airport 155, 172
Kingdon airport 157
Knot
airspeed indicator 6-7, 11
defined 191
measuring distance 38
statute mile conversion 191

L key, lights turning on/off 35, 183
LaGuardia airport 153
Lake Tahoe airport 157
Landing
airspeed control 51, 101
analysis 129
approach 50, 101
ATIS information transmittal 14, 38
braking 51
crosswind 105

Landing *(continued)*
descent 50, 99
distance to runway 128
elevator position 51, 99, 101, 103
engine failure 35, 51
flap position 33, 50, 101
flare 51, 189
flight analysis 129
gear *See* Landing gear
gliding technique 50, 101, 193
ILS
frequencies 153-157
method 128, 190
instrument landing *See herein* ILS
Learjet 54
lesson 101
marker lights *See* Beacon
Omni-Bearing indicator 13
power glide 193
procedure 50-51
rate of sink 54, 99
rudder 51
stalling 50-51, 101, 103
throttle 51
weight maximum 175-176
zoom control setting 28
Landing Analysis menu option 129
Landing gear
Cessna 175
defined 191
drag 54
figure 17
gear indicator 6-7, 15
Learjet slow down 54
multiple player information 142
raising/lowering 36, 51, 183
Landmark
multiple player flight 143
pilotage 121, 193
Lansing Municipal airport 154
Lateral axis 20, 191
LaVerne airport 156
LAX *See* Los Angeles International airport
Learjet
aircraft specifications 61, 176
airspeed 53-54
flying procedures 53-54
fuel tank capacity 76, 176
instruments 53
landing 54
Learjet *(continued)*
overspeed condition 54
performance specs 61, 176
selecting 59, 61
shock wave 54
takeoff weight maximum 54, 176
warning buzzer 54
LEFT arrow key
See also 4 key (numeric keypad)
banking xviii
viewing from left of aircraft xviii, 26
window
selecting 27, 183
width narrowing 30
Left bracket key ([)
window turning on/off 26-27, 30, 183
zooming 26, 28
Left wing fuel tank gauge 6-7, 13
Less-than symbol (<), multiple player communication 140-141
Lessons
aerobatics 109-119
aileron roll 114
attitude flying 97
climbing 98-100, 104
descending 99
Flight instruction menu option 59, 95-96
flight training
advanced 103-107
basic 95-101
ground school 87-93
Hammerhead 118-119
Immelman 117
Instructor Control mode 95
inverted flight 115
landing 101, 103
loop 112-113
selecting 95
slip 105
spin 110-111
Split S 116
stall 103-104
steep turn 105
straight and level flight 97
Student control mode 95, 96
takeoff 100, 104
taxiing 96
traffic pattern 106
turning 98, 105
uncoordinated flight 105

Lessons *(continued)*
VOR tracking 107
Lewis University airport 154
Lift
defined 191
flap position 33-34
flight physics 87-89
Lift off 100, 191
Lights
adjustment 35, 183
approach lights 128
bulb replacement 35
indicator 6-7, 15
night flight 35-36
realism mode 73
running lights
defined 35, 193
indicator 6-7, 15
strobe
indicator 6-7, 15
night flight 36
turning on/off 35-36, 183
turning on/off 35-36, 183
Lights indicator 6-7, 15
Little River airport 157
Livermore airport 157
Loading aircraft 90
Localizer 128, 190
Location designating 8, 78
Lodi airport 157
Logbook xvi, 85-86
Logging hours 59
Long Island MacArthur airport 153
Longitudinal axis 18, 191
Loop
Immelman turn 117
lesson 112-113
recovering 113
spot plane positioning 32
Loop menu option 113
Los Angeles area airports 156
Los Angeles International airport 156, 166

M key, magneto adjustment 35, 183
Mach maximum operating speed (Mmo) 54
Machine gun 147-148, 185
Magnetic bearing 14, 126
Magnetic compass
heading indicator calibrating 13, 39
Magnetic compass *(continued)*
instrument panel display 6-7
Magnetic defined 191
Magnetic heading
defined 190
magnetic bearing calculation 14, 126
Magnetic variation 191
Magneto
adjustment 35, 183
defined 15, 191
Magnetos indicator 6-7, 15
Maneuver
accelerated maneuver stall 104
aerobatic *See* Aerobatics
analysis 129-130
Maneuver Analysis menu option 129-130
Maneuvering speed 104, 192
Manually-coordinated flight *See* Uncoordinated Flight mode
Map display menu option 75
Map menu option 25
Map window
display 8
moving 29
resizing 11, 29-30
selecting 26
turning on/off 25-26, 30-31, 46-48, 75, 183
zooming 25-28, 46-47, 75-76, 183
Map zoom in menu option 75-76
Map zoom out menu option 75-76
Marker lights
See also Beacon
function 13, 79
ILS 128
instrument panel display 6-7
Martha Lake airport 155
Martha's Vineyard airport 153, 167
Marysville airport 157
McClennan-Palomar airport 156
MDW *See* Chicago Midway airport
Meadowlark airport 156
Mean sea level altitude 68-69, 187
Meigs Field
coordinates 154
runway map 163
startup xviii, 45, 59
Memory
bytes required xii
course plotting limitations 130

Mendocino County airport 157
Menu
See also specific menu
exiting 10, 185
option *See* Menu options
overlapping 10, 31, 183
screen display 8
Menu bar activating 10
Menu options
selecting xi-xii, 8-9, 177
startup menu display xvii
symbols xi, 9
toggling 9
Menu system 10, 185
Merced airport 157
Meriden Markham Municipal airport 153
Merrill C. Meigs airport 154, 163
Message box 140-142
Message mode 142
Messages/Talk to modem menu option 142
Metro Oakland International airport 157, 168
Microsoft Mouse *See* Mouse
Millibars 12
Minden airport 157
Minus key (−)
ADF setting 38, 185
COM radio setting 185
NAV radio setting 36, 185
OBI setting 37, 123
transponder setting 39, 185
value decreasing xii
VOR setting 185
zooming 26, 28, 46-47, 76, 183
Mmo 54
Mode Library menu option
control sensitivity saving 62
flight mode 61
report 62
use 59-60
Mode menu
Aircraft Library menu option 59, 61
Create mode menu option 59
Demo menu option 59
Demo Recorder menu option 59
EFIS/CFPD Display menu option 59, 131
Entertainment menu option *See* Entertainment mode
Flight Analysis menu option 59, 129-130
Flight Instruction menu option *See* Flight Instruction menu
Mode menu *(continued)*
Instant Replay menu option 59, 63
menu bar 8
menu options 59-65
Mode Library menu option *See* Mode Library menu option
Normal Flight menu option 59
Plane menu option 59, 61
Quit menu option xvii, 59
Reset mode menu option 59, 61
Review Logbook menu option 59
Modem 139-142
Modesto City airport 157
Monee airport 154
Monochrome screen 8
Monroe airport 155
Monterey Peninsula airport 157
Morris Municipal airport 154
Mouse
aileron control 19, 179
banking 19, 178-179
braking 24, 178
clicking xii
clock setting 13
Control Yoke mode xiii, 9, 177-179
elevator control 20-21, 278
flap adjustment 33
flight control xvi
installation 177
menu option selecting 9, 177
NAV radio setting 37
OBI setting 38
pitch control 21, 178
Pointer mode 177, 179
recording limitations 64
rolling 19
sensitivity
adjustment 71, 179
saving 62
setup 8, 177
slewing 76-77
starting Flight Simulator program 177
throttle control 24, 178
World War I Ace game 147
Mouse menu option 71, 179
MSL 68-69, 187
Multi-Player mode
See also Multiple players
baud rate 140
communication 139

Multi-Player mode *(continued)*
connecting computers 139-141
exiting 142
menu option 139-143
suggestions 143
tracking plane 79, 141, 143
Multi-Player Track mode 27, 141, 143
Multiple players
See also Multiple-Player mode
aerobatics viewing 143
autopilot 143
connecting computers 139-141
coordinate display 141
message sending and receiving 142
modem 139-142
sending aircraft 141-142
straying apart 143
tracking aircraft 79, 141, 143
MVI *See* Martha's Vineyard airport

N key
ADF radio setting 38, 185
NAV radio setting 36-37, 185
Napa County airport 157
Nautical mile
defined 191
measuring 14, 126
Nautical miles per hour *See* Knot
NAV 1 radio
described 14
DME system 38, 126, 185
function 78
lock 79-80
radio stack display 6-7
VOR tracking 13-14, 80, 107
NAV 2 radio
ADF 13, 38
described 14
DME system 38, 126, 185
function 78
radio stack display 6-7
selecting 38, 185
NAV defined 192
NAV radio
See also NAV 1 radio; NAV 2 radio
backup 125
cross-checking position 14, 36, 124-125
DME system 38, 126, 185
flight progress 125
NAV radio *(continued)*
ILS 14, 128
nautical mile measuring 14
setting 36-37, 75, 185
NAV radio menu option 37, 75
NAV/COM defined 188
NAV/COM menu
ADF menu option 38, 75
Air traffic control communications menu option 75
Autopilot menu option 75, 79-80
COM radio menu option 75
EFIS/CFPD visuals menu option 75
Map display menu option 75
Map zoom in menu option 75-76
Map zoom out menu option 75-76
menu bar 8, 37-38
menu options 75-80
NAV radio menu option 37, 75
Position set menu option 75-76, 78, 141
Scenery load menu option 75
Scenery menu option 75
Slew
See also Slewing
menu option 75-76, 78
Transponder menu option 75
Navigation
ADF *See* ADF
aids 78-79, 121-128, 131
airport beacon 13, 78-79, 128
CFPD 131
dead reckoning 121, 189
DME *See* DME
EFIS *See* EFIS/CFPD
glideslope 6-7, 13, 128, 190
ILS *See* ILS
NAV/COM menu 8, 37-38, 75-80
pilotage 121
radio *See* ADF; COM radio; NAV radio
relative bearing 14, 126
VOR *See* VOR
NDB 126-127
New Haven airport 153
New Lenox-Howell airport 154
New York area airports 153
Night flight
airport beacon 13, 78-79, 128
clouds 36
lights 35-36
seasonal changes 68

Night flight *(continued)*
star constellations 67
strobe light 36
No-questions-asked startup xv-xvii
Nondirectional radio beacons (NDBs) 126-127
Normal Flight mode 59
Nose down
See also Pitch
joystick control 20-21, 181
keyboard control 20-21, 184
mouse control 20-21, 178
slewing 77, 186
Nose over 192
Nose up
See also Pitch
joystick control 20-21, 181
keyboard control 20-21, 184
mouse control 20-21, 178
slewing 77, 186
Nose wheel 17
Null zone adjustment 179
NUM LOCK key
map window turning on/off 26-27, 31, 46-48, 75, 183
zooming 26, 28, 46-47, 76, 183

O key, strobe light 35-36, 183
OAK *See* Oakland International airport
Oakland International airport 157, 168
OBI *See* Omni-Bearing Indicator (OBI)
Oceanside Municipal airport 156
O'Hare International airport 154, 164
Oil pressure gauge
instrument panel display 6-7, 13
pre-takeoff check 48
Oil temperature gauge 6-7, 13
OLM *See* Olympia airport
Olympia airport 155, 169
Omni-Bearing Indicator (OBI)
cross-checking position 124-125
defined 13, 192
function 78
instrument panel display 6-7
readings 123-124
setting 37-38, 123
Omni-Bearing selector 123
On-line menu option 139-141
Ontario International airport 156
Operational mode 59
Orange County airport 156, 171
ORD *See* O'Hare International airport
Oroville airport 157
Oxford airport 153

P key, pausing/restarting 8, 48, 65, 71, 143, 183
PAGEDOWN key *See* 3 key (numeric keypad)
PAGEUP key *See* 9 key (numeric keypad)
Paine Field 155, 165
Panel window *See* Control panel
Partial panel flying 74
Pause menu option 71
Pausing Flight Simulator program 8, 48, 65, 71, 143, 183
Paxton airport 154
Period key (.), braking 24-25, 47, 51, 183
Phonetic alphabet 192
Pierce County-Thun Field 155
Pilot log *See* Logbook
Pilotage 121, 193
Pitch
See also Nose down; Nose up
airspeed control 99, 101
artificial horizon 12
attitude indicator 12, 21, 90
climbing 98-99
defined 12, 193
elevator position 15, 20-21
figure 20
joystick control 21, 181
keyboard control 21, 184
landing 101
mouse control 21, 178
slewing control 77, 186
straight and level flight 97
takeoff 100
Pivot point 88-89
Placerville airport 157
Plainfield airport 154
Plane *See* Aircraft
Plane menu option 59, 61
Plotting course 59, 130
Plus key (+)
ADF setting 38, 185
COM radio setting 185
NAV radio setting 36-37, 185
OBI setting 37, 123

Plus key (+) *(continued)*
right yaw 23, 184
transponder setting 39, 185
value increasing xii
VOR setting 185
zooming 26, 28, 46-47, 76, 183
Plus sign (+) xi, 9
Pointer mode and Control Yoke mode, toggling between xii, 9, 179
Port Angeles airport 155, 169
Port Orchard airport 155
Porterville airport 157
Position indicator window 29
Position set menu option 75-76, 78, 141
Pound sign (#) xi, 9
Power glide 193
Power loading 175-176
Pre-takeoff check 47-48
Primary flight controls 18-25
PRINT SCREEN key, resetting flight mode 61
Program disk
backup copy xiii
copy protection xiii
Flight Simulator startup xiii-xvii
write-protection xvi
Prop mode *See* Cessna
Propeller-driven aircraft *See* Cessna
Publications x-xi, 87, 91, 95
Puyallup airport 155

Q key
slewing altitude up 77, 186
sound turning on/off 8, 71, 183
Quit menu option xvii, 59
Quit Multi-Player menu option 142
Quitting Flight Simulator program xvii, 59

R key, War report 146-148, 185
Radar
ATC tracking 39
World War I Ace game 147
Radial
course deviation 123-124
defined 14, 122, 193
intercepting 123-124
landing 128
OBI readings 123-125
selecting 123
Radial *(continued)*
TO-FROM indicator 123-124
Radio *See* ADF; COM radio; NAV radio
Radio stack
defined 193
display 6-7, 11
resizing window 11, 26, 29-30
Rate of climb
defined 193
increasing 48-49, 99
maximum rate 175
measuring 13, 193
Rate of climb indicator
See also Vertical Speed Indicator
defined 13, 193
instrument panel display 6-7
Rate of descent 91
Rate of sink 54, 99, 193
Realism menu option 71, 73
Reality mode
altimeter reading 39
heading indicator 46
Rear wings *See* Horizontal stabilizer
Rebooting xvii
Recalling flight situations *See* Demo flight; Instant replay
Recording
course 130
flight 63-64
instant replay 8, 63-64
mouse limitations 64
Recovery
aileron roll 114
Hammerhead 119
Immelman turn 117
inverted flight 115
loop 113
spin 111
Split S 116
stall 103-104, 111
Red Bluff airport 157
Refueling
airport services 51, 153-157
World War I Ace game 148
Regular flight mode, selecting xv, xviii
Reid-Hillview airport 157
Relative bearing 14, 126
Reliability menu option 8, 71, 73
Reno airport 157
Renton Municipal airport 155

Report key 146-148, 185
Republic airport 153
Reset mode menu option 59, 61
Resuming flight after
  demo 65
  instant replay 63
  maneuver analysis 130
  slewing 78
Review Logbook mode 59
RIGHT arrow key
  See also 6 key (numeric keypad)
  viewing from right of aircraft 26
  window width widening 30
Right bracket key (])
  window
    selecting 27, 183
    turning on/off 26-27, 30-31, 183
  zooming 26, 28
Right wing fuel tank gauge 6-7, 13
Riverside Municipal airport 156
Rolling
  See also Banking
  aerobatic maneuver 114
  aileron control 18-19, 90
  attitude flying 90
  figure 18
  joystick control 19, 181
  keyboard control 19
  mouse control 19
  roll defined 193
  spot plane positioning 32
Rolling out 49-50
Romeoville airport 154
Rotation
  control yoke 18, 100
  defined 48, 193
  speed 100, 193
  takeoff 100
Rotations per minute (RPM) 194
Roundout *See* Flare
RPM 194
Rudder
  adjustment 22-23, 46-48, 184
  aileron linkage 15, 46, 49, 71-72
  Auto-coordinated Flight mode 15, 46, 49, 71-72
  banking 98
  centering 23, 46-48, 184
  defined 15, 22, 193
  figure 17, 22
Rudder *(continued)*
  ground steering 51
  Hammerhead 119
  joystick control 23, 179-181
  keyboard control 23, 184
  landing 51
  Learjet 54
  position indicator *See* Rudder position indicator
  pre-takeoff check 47
  slip 105
  spin recovery 111
  stall recovery 111
  steering 47, 51, 100
  straight and level flight 97
  takeoff 100
  Uncoordinated Flight mode 46, 105
  yawing *See* Yaw
Rudder pedal 24, 47, 51
Rudder position indicator
  Auto-coordinated Flight mode 15
  described 15
  instrument panel display 6-7, 23
  mouse actions 178
Running lights
  defined 35, 193
  on/off indicator 6-7, 15
Runway
  active
    defined 187
    designation 47, 51
  approach *See* Landing
  beacon 78-79, 128
  dimensions 159-173
  landing *See* Landing
  maps 159-173
  number 47, 51, 159-173
  takeoff *See* Takeoff
  taxiing 47, 96

S key
  cockpit mode/tower mode alternating 28
  view mode selecting 26-27, 141, 183
Sacramento Exec. airport 157
Sacramento Metro airport 157
Salinas airport 157
SAN *See* San Diego International-Lindbergh Field
San Diego International-Lindbergh Field 156, 170

San Francisco area airports 157
San Francisco International airport 157, 170
San Jose airport 157
Sanderson Field 155
Sanger airport 154
Santa Ana airport 156, 171
Santa Monica Municipal airport 156, 171
Santa Rosa airport 157
Saving
  flight mode 60, 62
  situations *See* Recording
Scanning instruments and displays 91
Scenery
  line drawing, shading specifying 26, 31
  specifying 75
Scenery disk 75
Scenery load menu option 75
Scenery menu option 75
Schaumburg Air Park 154
Screen
  color display 8
  full screen tower view 25, 31
  graphics display 8
  instrument panel display 8
  map views 8
  menu display 8
  three-dimensional view 8
  window display 5-6, 8
SCROLL LOCK key
  cockpit mode/tower mode alternating 28
  substitutions 28
  view direction xviii, 26, 28, 183
SEA *See* Seattle-Tacoma International airport
Sea level 12
Season menu option 67
Seattle area airports 155
Seattle-Tacoma International airport 155, 172
Second 3D menu option 25
Secondary aircraft controls 33-36
Semicolon (;) xi, 9, 62
Send Aircraft menu option 141-142
Servicing
  See also Refueling
  airport locations 51
Set Spot Plane menu option 26, 32
Setup windows menu option 11, 26, 29-30
SFO *See* San Francisco International airport
Shader menu option 26, 31
Shady Acres airport 155
Shelton airport 155
Shock wave 54
Shooting enemy aircraft 148, 185
Shutting down *See* Exiting
Sim menu
  Auto coordination menu option 71-72
  Control panel instruments menu option 71, 74
  Control position indicator menu option 71
  Crash menu option 71-72
  Ground Texture menu option 71-72
  Joystick menu option 71, 180
  Keyboard sensitivity menu option 71, 74
  menu bar 8
  menu options 71-74
  Mouse menu option 71, 179
  Pause menu option 71
  Realism menu option 71, 73
  Reliability menu option 8, 71, 73
  Smoke system menu option 71-72
  Sound menu option 71
Simulation
  control 8, 71-74
  pausing, restarting 8, 48, 65, 71, 143, 183
Single-engine aircraft *See* Cessna
Sink rate 54, 99, 193
Skid 12, 105, 194
Skywriting 130
Slew menu option 75-76, 78
Slewing
  coordinates 76, 78
  freezing 77, 186
  joystick control 77
  keyboard control 77, 186
  mouse control 77
  multiple player flight 143
  slew mode 75-78
  turning on/off 75, 78
Slip
  defined 12, 194
  lesson 105
Slip/skid attitude 12
Slowing down *See* Drag
SMO *See* Santa Monica Municipal airport
Smoke system 8, 71-72, 183
Smoke system menu option 71-72
Snohomish County airport 155, 165
Sonoma County airport 157
Sound adjustment 8, 71, 183
Sound menu option 71

South Lake Tahoe airport 157
Southbridge Municipal airport 153
SPACEBAR
  flying restart xii
  gunfire control 147, 148, 185
  main menu bar display xii
  menu deselecting 10, 185
Spanaway airport 155
Specification Report menu option 61
Speed *See* Airspeed
Spin 110-111
Spin menu option 111
SPLASH 47
Split S menu option 116
Spot mode 8, 25, 27, 183
Spot plane 26, 32
Spot view *See* Spot mode
Spring conditions 67-68
Squawk code 39, 194
Stall and general warning indicator 6-7, 16
Stall speed
  Cessna 175
  defined 16
  flap position 33, 50
  Learjet 176
Stalling
  cause 49, 100, 103-104
  Hammerhead 118-119
  indicator display *See* Stall and general warning indicator
  landing 50-51, 101, 103
  landing analysis 129
  lesson 103-104
  recovery 103-104, 111
  speed *See* Stall speed
  spin 111
  takeoff 100, 104
  wing stall 88, 111
Standard pressure 12, 194
Standardized instrument cluster 6-7, 11-13, 194
Stars menu option 67
Starting
  first flight xviii
  Flight Simulator program xiii-xvii, 177
  no-questions-asked startup xv-xvii
Startup mode 59, 63
Statute mile 191
Stead airport 157
Steep turn 105
Steering
  See also Turning
  ground steering 51, 100
  rudder 100
  rudder pedals 47, 51
Stockton Metro airport 157
Stopping
  demo recording 64
  Flight Simulator program *See* Pausing Flight Simulator program; Quitting Flight Simulator program
Storing information *See* Saving
Straight and level flight 12, 49, 97
Strobe indicator 6-7, 15
Strobe light *See* Lights
Student control mode 95, 96
Summer conditions 67-68
Symbols xi, 9
System requirements xii-xiii, 179-180

T key
  transponder adjusting 39, 185
  window moving 30
Tachometer
  defined 194
  instrument panel display 6-7, 13
  Learjet 53
Tacoma Narrows airport 155
Takeoff
  Cessna 48-49
  crosswind lesson 100
  first flight xviii
  flap position 33
  Learjet 54
  lesson 100
  roll 100, 194
  stalling 100, 104
  weight maximum 54, 175-176
  wind setting 69
  zoom control setting 28
Takeoff roll 100, 194
Target location 146
Taxiing
  lesson 96
  procedure 47
  taxi defined 194
Telephone connection 139-141
Terms 187-195

Three-dimensional window
  crashing effect 47
  graphic display 8
  ground texture 72
  moving 26, 29
  number allowed 27
  position on screen 6, 11
  resizing 11, 26, 29-30
  selecting 26
  turning on/off 25-27, 30-31, 183
  zooming 26-28, 183
Throttle
  adjusting 24-25, 49, 184
  defined 25, 194
  descending 50, 99
  Hammerhead 119
  increasing to full xviii, 24, 184
  joystick control 24, 179-182
  keyboard control 24, 184
  landing 51
  loop 113
  mouse control 24, 178
  position indicator *See* Throttle position indicator
  rate of climb increase 48
  realism mode 73
  stall recovery 103
  straight and level flight 49
  takeoff 48, 100
Throttle position indicator
  described 15
  instrument panel display 6-7
  mouse actions 178
Thrust 87-88, 194
Thunderstorms 67, 69
Time
  clock *See* Clock
  designating 8, 67-68
  flight time 76
  season variance 68
Time Set menu option 13, 67-68
Title bar
  position on screen 11
  removing 31
  turning on/off 26
Titles on windows menu option 26, 31
TO-FROM indicator 123-124
Torrance Municipal airport 156
Tower mode
  cockpit mode/tower mode alternating 28
Tower mode *(continued)*
  full screen tower view 31
  selecting 8, 25-27, 183
Tower placement 78
Tower view *See* Tower mode
Track mode
  multi-player mode 27, 141, 143
  selecting 8, 25-27, 141, 183
Track view *See* Track mode
Traffic pattern 106
Training *See* Lessons
Transponder
  defined 14, 194
  function 79
  radio stack display 6-7
  setting 39, 75, 185
  transmitting code 39, 194
Transponder menu option 75
Trim
  defined 194
  elevator *See* Elevator trim
  indicator *See* Elevator trim indicator
Trim tab 17
Truckee-Tahoe airport 157
True airspeed 194
Turbulence 69
Turn coordinator 6-7, 12, 105
Turn rate 12
Turning
  See also Banking; Steering
  climbing turn 98-99
  coordinated turn 12
  Hammerhead 118-119
  Immelman 117
  lesson 98, 105
  procedure 49-50
  rolling out 49-50
  steep turn lesson 105
  Uncoordinated Flight mode 105
Tweed-New Haven airport 153
Type certificate 104, 194

Uncontrolled airspace 92
Uncoordinated flight defined 194
Uncoordinated Flight mode
  aileron roll 114
  aileron/rudder action 46, 100, 105
  Hammerhead 119
  lesson 105

Uncoordinated Flight mode *(continued)*
spin 111
takeoff 100
University of Illinois-Willard airport 154, 162
UP arrow key
See also 8 key (numeric keypad)
forward view from aircraft xviii, 26
nose down 21
window height decreasing 30
Urbana airport 154

V key, VOR 37, 123, 185
Van Nuys airport 156, 173
Velocity readout 38, 185
Vermilion County airport 154
Vertical axis 22
Vertical speed indicator
See also Rate of climb indicator
attitude flying 91
defined 13, 193
instrument panel display 6-7
straight and level flight 97
Vertical stabilizer 22, 195
Vertical velocity indicator *See* Rate of climb indicator
Very high frequency Omnidirectional Range *See* VOR
VFR *See* Visual Flight Rules (VFR)
VHF Marker Beacons *See* Beacon
View mode
See also specific mode
selecting 27-28
title bar display 11, 26, 31
Viewing
aircraft 27, 141
directions xviii, 25-28, 183
menu option 8, 25
SCROLL LOCK key combinations xvi, 26
Views menu
Axis indicator menu option 15, 25, 31
Direc: menu option 25, 28
First 3D menu option 25, 27
From: menu option 25, 27
Full screen tower view menu option 25, 31
Map menu option 25, 27
Second 3D menu option 25, 27
Set Spot Plane menu option 26, 32
Setup windows menu option 11, 26, 29, 30
Shader menu option 26, 31
Views menu *(continued)*
Titles on windows menu option 26, 31
Window: menu option 25, 27
Zoom menu option 25, 28
Visalia airport 157
Visual Flight Rules (VFR)
defined 195
FAA regulations 5
flying under 45, 92
navigation 121
VNY *See* Van Nuys airport
VOR
See also OBI
cross-checking position 14, 124-125
defined 13, 78, 195
DME capabilities 126
flight progress 125
lesson 107
NAV radio
cross-checking position 14, 36, 124-125
NAV 1 radio 13-14, 80, 107
setting 36-37
tracking 13-14, 80, 107
navigation 122-125
radial *See* Radial
setting 37-38, 122-123, 185
tracking 107, 122-125

W key, War key 146-148, 185
War declaration 146-148, 185
War report 146-148, 185
Warning buzzer 54
Waterbury-Oxford airport 153
Watsonville airport 157
Weather
ATIS transmittal 14, 38
IFR flying 93
VFR flying 45, 92
visibility and instrument requirements 91-92
Weathervane effect 88-89, 195
Weight
aircraft loading 90
Cessna 175
flight physics 87-88
Learjet 176
West Chicago airport 154
Westchester County airport 153
White Plains airport 153

William R. Fairchild International airport 155, 169
Willimantic airport 153
Willows airport 157
Wind
  course deviation 124
  setting 8, 67, 69
Windham airport 153
Window
  3-D *See* Three-dimensional window
  changing 27
  control panel 29-30
  map *See* Map window
  moving 26, 29, 30
  number allowed 27
  options 29, 31
  overlapping 31, 183
  resizing 11, 26, 29-30
  screen display 5-7
  selecting 26-27, 183
  setting up 8
  title bar 11, 26, 31
  turning on/off 25-27, 30-31, 183
  zooming 26-28, 183
Window: menu option 25, 27
Winds menu option 67, 69
Windsor Locks airport 153
Wing
  area 175-176
  autopilot leveler 79
  dihedral effects 49
  figure 17
  flight physics 88-90
  loading 175-176
  measurement *See* Chord
  stall 88, 111
Wing aspect ratio 176
Wingspan 175-176
Winter conditions 67-68
World War I Ace game
  ace requirements 146
  battleground 145
  bombs 146-148, 185
  description 145
  dogfight 145
  enemy aircraft *See* Enemy aircraft
  enemy territory 146
  Entertainment menu 59, 145
  fighter aircraft instrumentation 147
  joystick control 147
World War I Ace game *(continued)*
  keyboard control 147, 185
  mouse control 147
  pausing 146
  radar 147
  refueling 148
  resuming 146
  score display 146-147
  target location 146
  war declaration 146-148, 185
  war report 146-148, 185
WWI Ace menu option 145

X key, bomb release 146-148, 185
XPNDR *See* Transponder

Y-adapter 180-181
Yaw
  adjustment 23, 184
  defined 22, 195
  figure 22
  joystick control 23
  keyboard control 23, 184
  rudder position 49
Yoke joystick 170-182
Yoke mode
  mouse functions 178
  Pointer mode toggling xii, 9, 179
Yuba County airport 157

Z key
  autopilot turning on/off 80, 183
  slewing control 77, 186
Zoom indicator 6-7, 15
Zoom menu option 25, 28
Zooming
  active window 25-28
  aerobatics 28
  map window 25-28, 46-47, 75-76, 183
  three-dimensional window 26-28, 183
  window 26-28, 183
  zoom factor display 28

Use this page for additional information.

Microsoft® Product Assistance Request

Microsoft Product Support—Phone: (206) 882-8089

Instructions

Use this form to request assistance or report problems with Microsoft software or hardware. You may also use this form to offer suggested product enhancements (use the space marked "Additional Information" at the end of the form). For comments on product documentation, use the documentation feedback form if one is included with your product.

We suggest you first make a copy of this form for future assistance requests. Then complete the form and mail it to Microsoft. All comments and suggestions become the property of Microsoft Corporation.

For a more rapid response, you may wish to call Microsoft Product Support at the number printed at the top of this form. Please have all the information requested on this form available when you call. For speed dialing, please read the README.DOC file included on one of your product disks. This file lists the three-digit phone code needed to reach the Microsoft support group for your product.

Name

Street

City State Zip

( ) ( )

Phone: Daytime Evening

Diagnosing a Problem

To help us help you, please first answer the following questions if you are having a problem:

1. Can you reproduce the error or problem?
   ☐ Yes ☐ No
2. Does the problem occur with another copy of the original disk of your Microsoft software?
   ☐ Yes ☐ No
3. Does the problem occur with another system (if available)?
   ☐ Yes ☐ No
4. If you were running other windowing or memory-resident software at the same time, does the problem also occur when you don't use the other software?
   ☐ Yes ☐ No

If you still need help after answering these questions and consulting your documentation, use the rest of this form to request assistance with your Microsoft product. The more complete the information you provide, the more we will be able to help you.

Product

Product name

Version number Registration number

☐ Assistance request ☐ Enhancement suggestion

☐ Other _____

Software

Operating System

Name/version number

Windowing Environment

If you were running Microsoft® Windows or another windowing environment, give name and version number of windowing software:

CD ROM Software

Name/version number

Other Software

Name/version number of any other software you were running when problem occurred, including memory-resident software (such as keyboard enhancers or print spoolers):

Hardware

Computer

Manufacturer/model _____ Total memory _____

Floppy-disk drives

Number: ☐ 1 ☐ 2 ☐ other
Size: ☐ 3½″ ☐ 5¼″
No. of Sides: ☐ 1 ☐ 2
Density: ☐ single ☐ double ☐ quad
Capacity:
5¼″: ☐ 160K ☐ 360K ☐ 1.2 megabytes
3½″: ☐ 360K ☐ 720K ☐ 1.4 megabytes

(If using DOS, you can run CHKDSK to determine the amount of memory available.)

Peripherals

Hard disk

Manufacturer/model _____ Capacity (kilobytes) _____

Printer/plotter

Manufacturer/model _____

☐ Serial ☐ Parallel

Printer peripherals, such as font cartridges, sheet feeders:

_____

_____

Mouse

Microsoft Mouse: ☐ bus ☐ serial ☐ InPort™
☐ Other

Manufacturer/model _____

Boards

☐ Add-on RAM board

Manufacturer/model _____

☐ Graphics-adapter board

Manufacturer/model _____

☐ Other boards installed

Manufacturer/model _____

Modem

Manufacturer/model _____

CD ROM Player

Manufacturer/model _____

Version of Microsoft MS-DOS® CD ROM Extensions:

_____

Network

Is your system part of a network? ☐ Yes ☐ No

Manufacturer/model _____

What hardware and software does your network use?

_____

_____

_____

Additional Information

In the space provided below, describe your request, problem, or suggestion in detail. Attach another sheet if necessary. If you're having a problem, please also do the following:

1. Isolate or reduce the problem to its simplest form.
2. Tell us exactly what you are doing and how you are doing it.
3. Tell us the keystrokes you used and provide us with a disk with the files (or source code) that will recreate the problem.
4. If you are running software under DOS, list the contents of your AUTOEXEC.BAT and CONFIG.SYS files, if available.
5. If using DOS, include the amount of memory CHKDSK shows is available.

NO POSTAGE
NECESSARY
IF MAILED
IN THE
UNITED STATES

BUSINESS REPLY MAIL

FIRST CLASS PERMIT NO. 108 BELLEVUE, WA U.S.A.

POSTAGE WILL BE PAID BY ADDRESSEE

Microsoft®

Attn: Product Support
16011 NE 36th Way
Box 97017
Redmond, WA 98073-9717

Microsoft Corporation
16011 NE 36th Way
Box 97017
Redmond, WA 98073-9717

Microsoft®

0388 Part No. 03085